www.CarGarage.ir

SECTION PG

POWER SUPPLY, GROUND & CIRCUIT ELEMENTS

CONTENTS

POWER SUPPLY & GROUND CIRCUIT

BASIC INSPECTION 3

BATTERY 3
- How to Handle Battery 3
- Work Flow 4

COMPONENT DIAGNOSIS 6

POWER SUPPLY ROUTING CIRCUIT 6
- Wiring Diagram - BATTERY POWER SUPPLY - 6
- Wiring Diagram - ACCESSORY POWER SUPPLY - 18
- Wiring Diagram - IGNITION POWER SUPPLY - 20
- Fuse 31
- Fusible Link 31
- Circuit Breaker 31

HARNESS LAYOUT 32

LHD 32
- LHD : How To Read Harness Layout 32
- LHD : Outline 33
- LHD : Main Harness 34
- LHD : Engine Room Harness 36
- LHD : Engine Control Harness 39
- LHD : Body Harness 45
- LHD : Room Lamp Harness 49
- LHD : Front Door Harness 50
- LHD : Rear Door Harness 52
- LHD : Back Door Harness 54

RHD 54
- RHD : How To Read Harness Layout 55
- RHD : Outline 56
- RHD : Main Harness 57
- RHD : Engine Room Harness 59
- RHD : Engine Control Harness 62
- RHD : Body Harness 68
- RHD : Room Lamp Harness 72
- RHD : Front Door Harness 73
- RHD : Rear Door Harness 75
- RHD : Back Door Harness 77

ELECTRICAL UNITS 78
- Terminal Arrangement 78

SMJ (SUPER MULTIPLE JUNCTION) 79
- Terminal Arrangement 79

HARNESS CONNECTOR 80
- Description 80

STANDARDIZED RELAY 83
- Description 83

FUSE BLOCK - JUNCTION BOX (J/B) 85
- Fuse, Connector and Terminal Arrangement 85

FUSE, FUSIBLE LINK AND RELAY BOX 86
- Fuse and Fusible Link Arrangement 86

IPDM E/R (INTELLIGENT POWER DISTRIBUTION MODULE ENGINE ROOM) 87
- Fuse, Connector and Terminal Arrangement 87

PRECAUTION 88

PRECAUTIONS 88
- Precaution for Supplemental Restraint System (SRS) "AIR BAG" and "SEAT BELT PRE-TENSIONER" 88

ON-VEHICLE REPAIR 89

BATTERY 89
- Exploded View 89
- Removal and Installation 89

BATTERY TERMINAL WITH FUSIBLE LINK 90
- Exploded View 90
- Removal and Installation 90

www.CarGarage.ir

www.CarGarage.ir

SERVICE DATA AND SPECIFICATIONS (SDS) 92

SERVICE DATA AND SPECIFICATIONS (SDS) 92

Battery 92

www.CarGarage.ir

www.CarGarage.ir

BASIC INSPECTION

BATTERY

How to Handle Battery

INFOID:0000000004897449

CAUTION:
- **If it becomes necessary to start the engine with a booster battery and jumper cables, use a 12-volt booster battery.**
- **After connecting battery cables, ensure that they are tightly clamped to battery terminals for good contact.**

METHODS OF PREVENTING OVER-DISCHARGE

The following precautions must be taken to prevent over-discharging a battery.
- The battery surface (particularly its top) should always be kept clean and dry.
- The terminal connections should be clean and tight.
- At every routine maintenance, check the electrolyte level.
  This also applies to batteries designated as "low maintenance" and "maintenance-free".

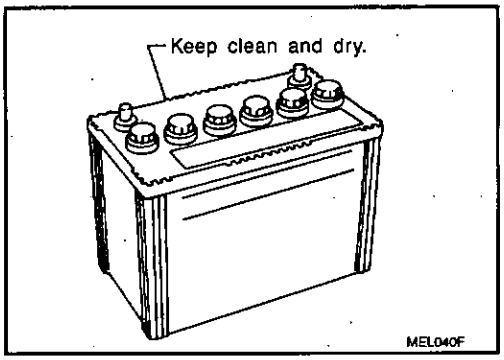

- When the vehicle is not going to be used over a long period of time, disconnect the battery cable from the negative terminal. (If the vehicle has an extended storage switch, turn it off.)

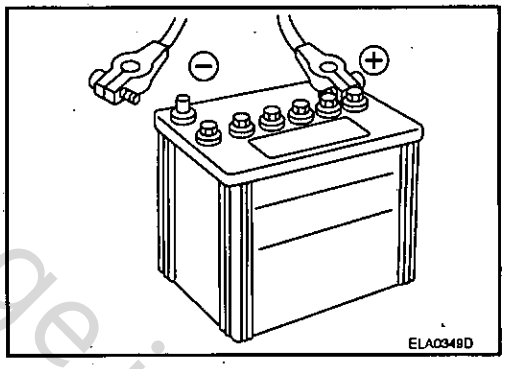

www.CarGarage.ir

www.CarGarage.ir

Work Flow

INFOID:0000000004897450

OVERALL SEQUENCE

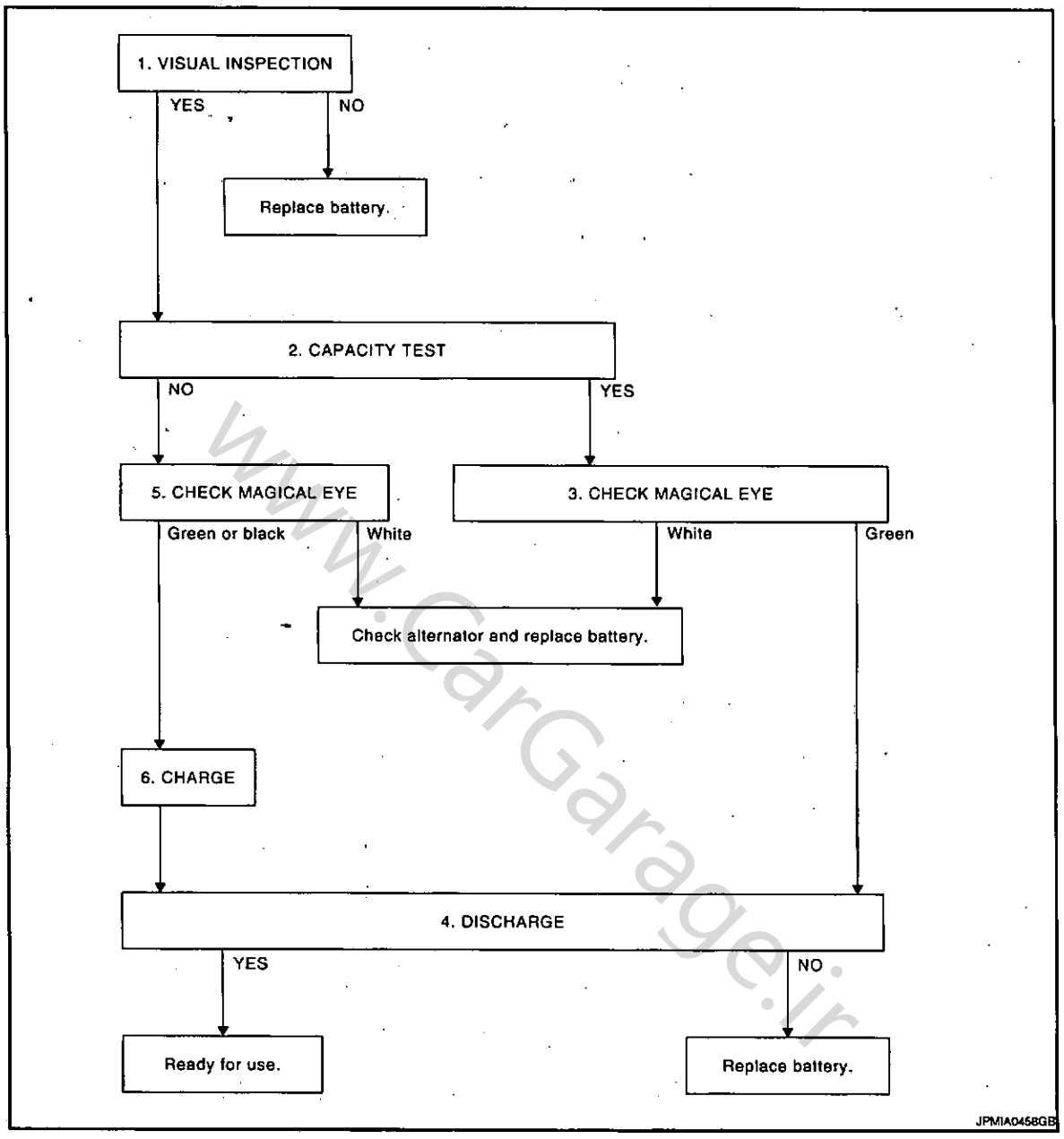

DETAILED FLOW

1.VISUAL INSPECTION

1. Check battery case for cracks or bends.
2. Check battery terminals for damage.

Are these inspection results normal?

YES >> GO TO 2.
NO >> Replace battery.

2.CAPACITY TEST

Check battery voltage.

Is the voltage 12.35 V or more?

YES >> GO TO 3.
NO >> GO TO 5.

www.CarGarage.ir

www.CarGarage.ir

3. CHECK MAGICAL EYE

Check the color of magical eye.

Inspection results

Green >> GO TO 4.
White >> Check alternator and replace battery. Refer to CHG-2, "Work Flow".

4. DISCHARGE

1. Check battery type and determine the specified current using the table.

Type	Current (A)
L2	300
L3	300

2. Perform discharge using the load tester.

Is the voltage 10 V or more?

YES >> Ready for use.
NO >> Replace battery.

5. CHECK MAGICAL EYE

Check the color of magical eye.

Inspection results

Green or black>>GO TO 6.
White >> Check alternator and replace battery. Refer to CHG-2, "Work Flow".

6. CHARGE

1. Determine the charge current and charging time according to the battery type.

Type	Current (A)	CHARGING TIME (h)
L2	10	8 - 12
L3	10	8 - 12

2. Charge battery.

>> GO TO 4.

www.CarGarage.ir

COMPONENT DIAGNOSIS

POWER SUPPLY ROUTING CIRCUIT

Wiring Diagram - BATTERY POWER SUPPLY -

INFOID:0000000004897451

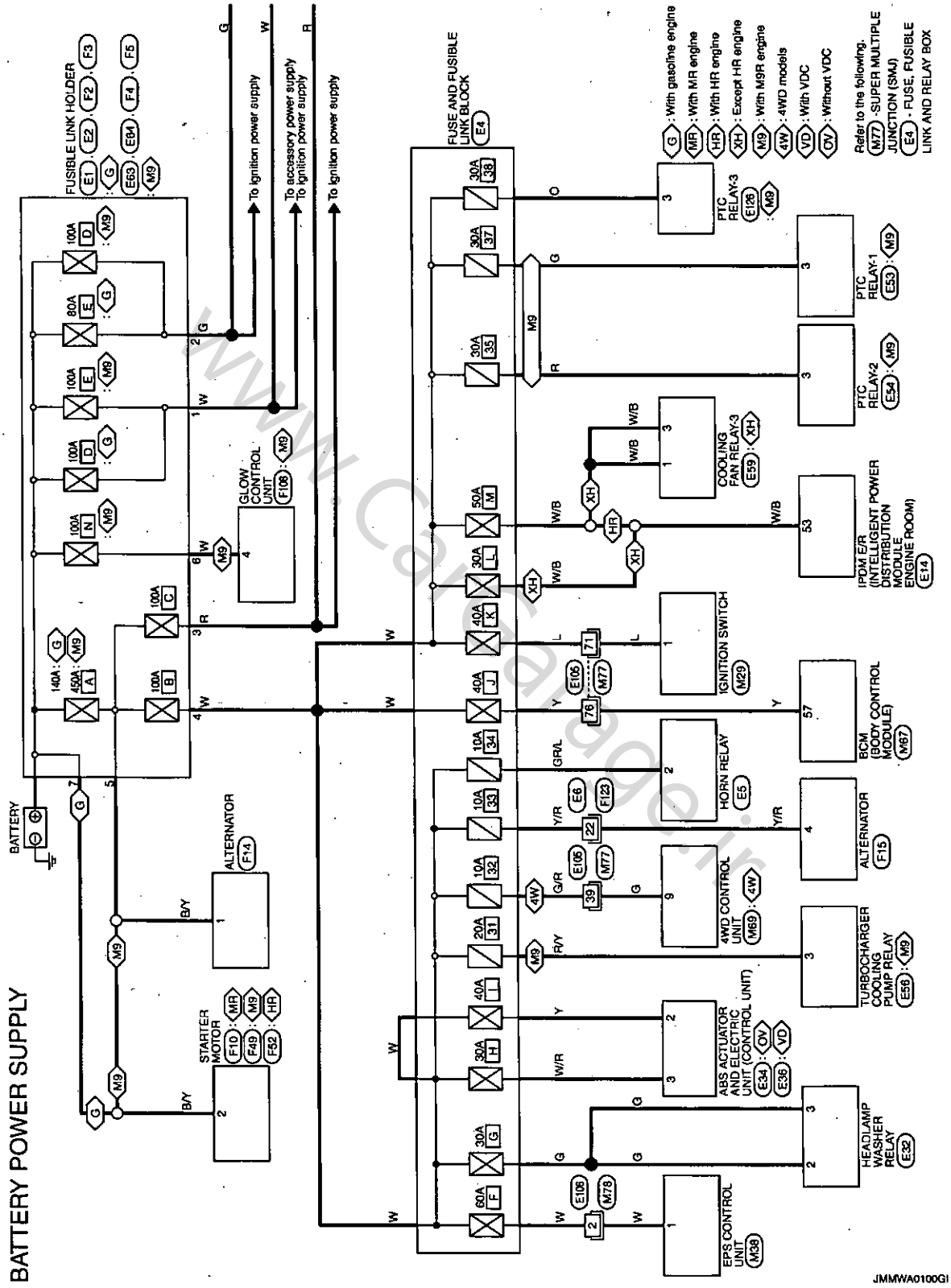

www.CarGarage.ir

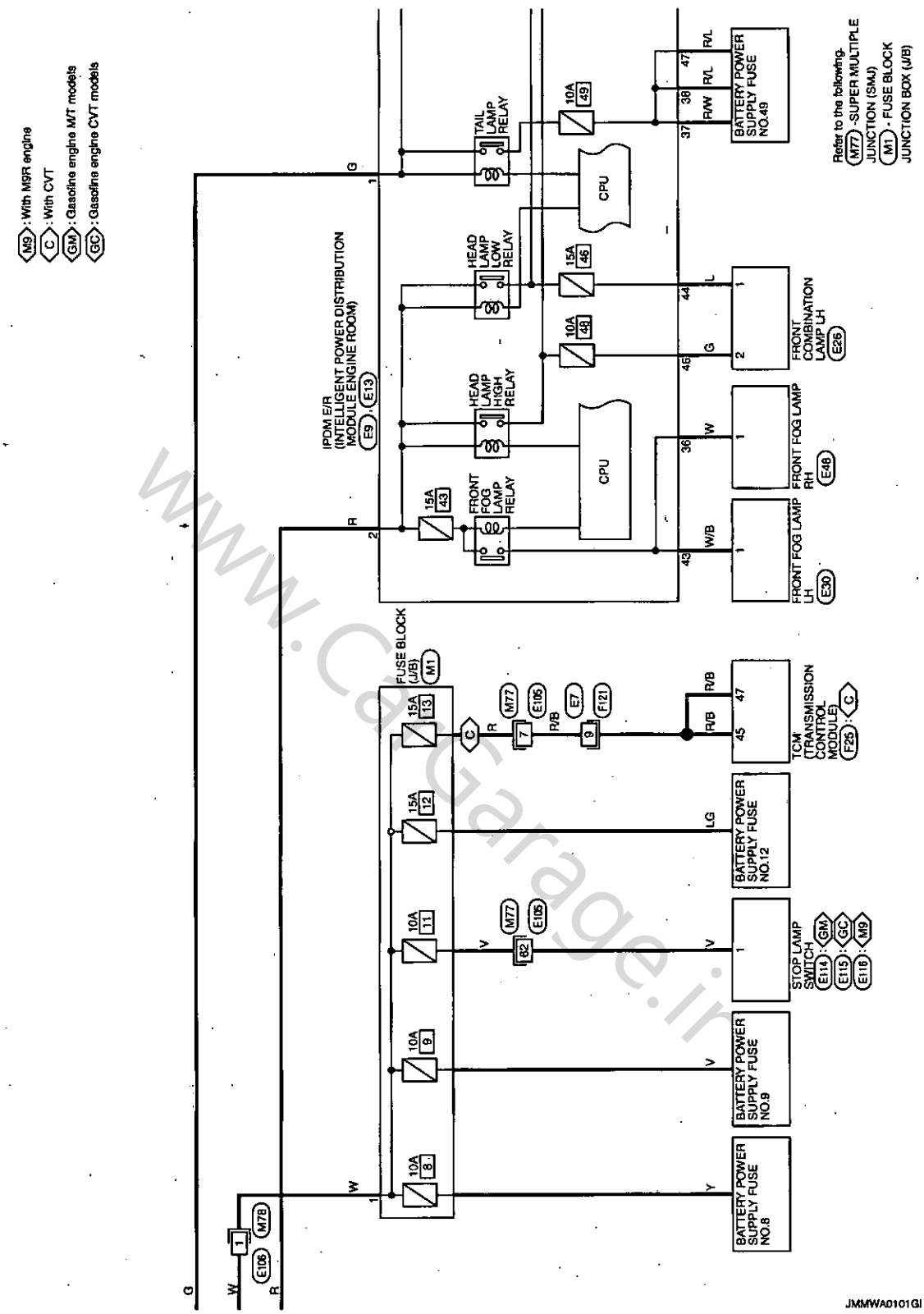

www.CarGarage.ir

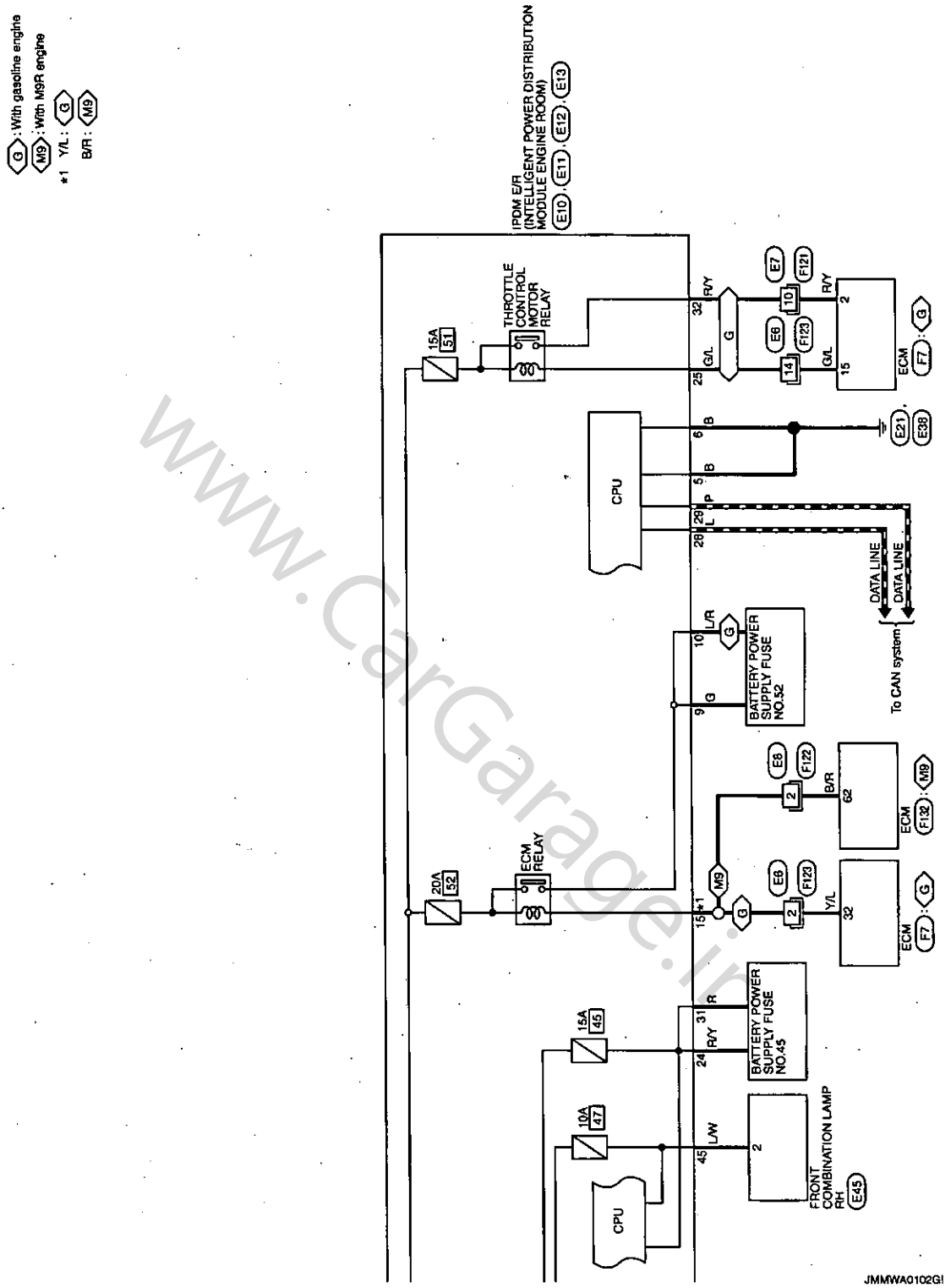

www.CarGarage.ir

www.CarGarage.ir

BATTERY POWER SUPPLY

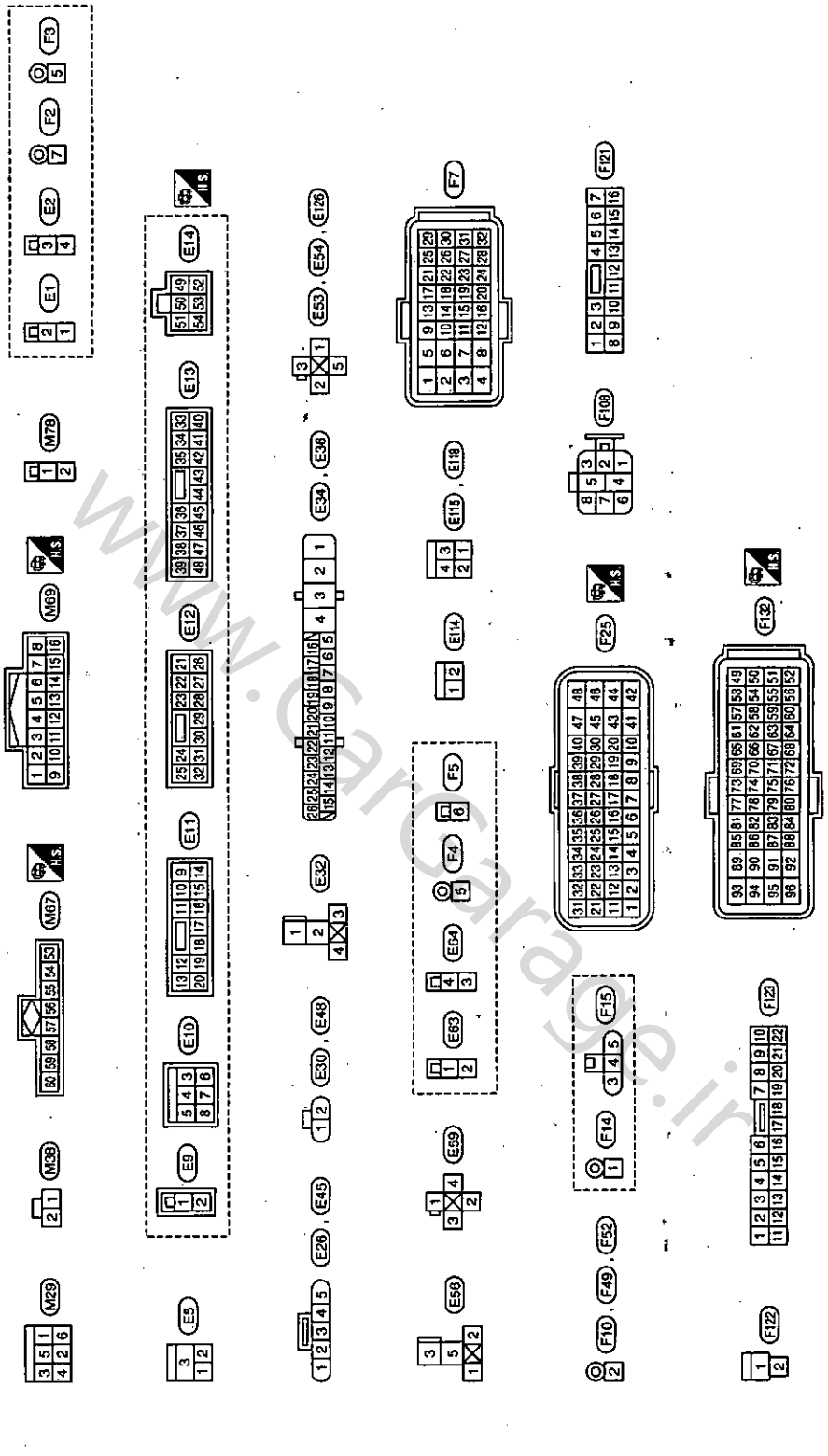

www.CarGarage.ir

BATTERY POWER SUPPLY FUSE NO.8

M9 : With M9R engine
IK : With Intelligent Key
OI : Without Intelligent Key
AA : With auto A/C

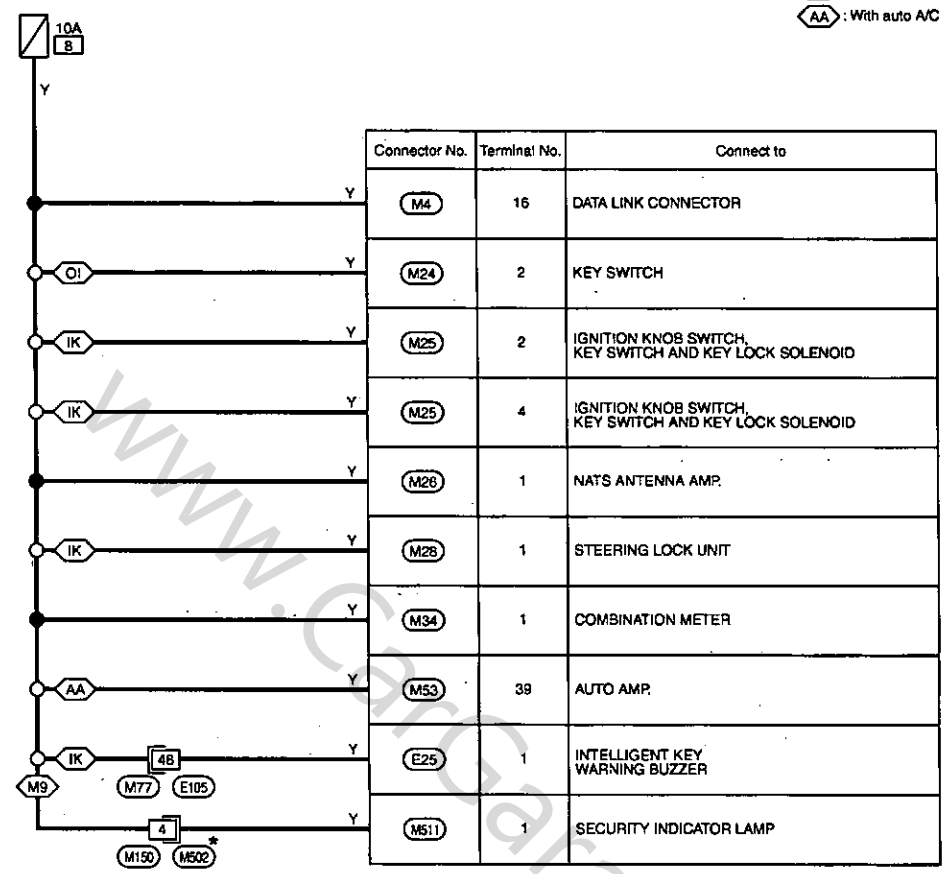

Connector No.	Terminal No.	Connect to
M4	16	DATA LINK CONNECTOR
M24	2	KEY SWITCH
M25	2	IGNITION KNOB SWITCH, KEY SWITCH AND KEY LOCK SOLENOID
M25	4	IGNITION KNOB SWITCH, KEY SWITCH AND KEY LOCK SOLENOID
M26	1	NATS ANTENNA AMP.
M28	1	STEERING LOCK UNIT
M34	1	COMBINATION METER
M53	39	AUTO AMP.
E25	1	INTELLIGENT KEY WARNING BUZZER
M511	1	SECURITY INDICATOR LAMP

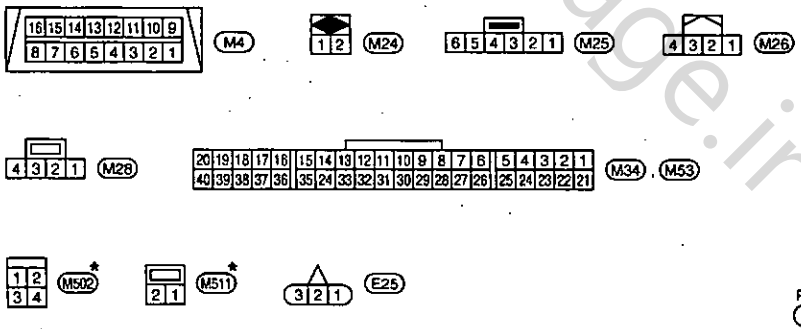

Refer to the following.
M77 -SUPER MULTIPLE JUNCTION (SMJ)

* : This connector is not shown in "Harness Layout" PG section.

JMMWA0104GI

www.CarGarage.ir

BATTERY POWER SUPPLY FUSE NO.9

IK : With Intelligent Key
AU : For Australia

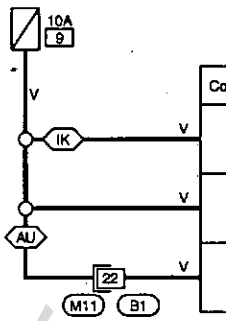

Connector No.	Terminal No.	Connect to
M40	11	INTELLIGENT KEY UNIT
M66	41	BCM (BODY CONTROL MODULE)
B83	1	LUGGAGE ROOM LAMP

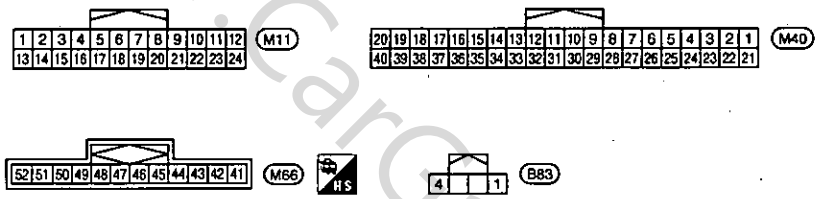

JMMWA0105GI

www.CarGarage.ir

www.CarGarage.ir

BATTERY POWER SUPPLY FUSE NO.12

TA : With TEL adapter

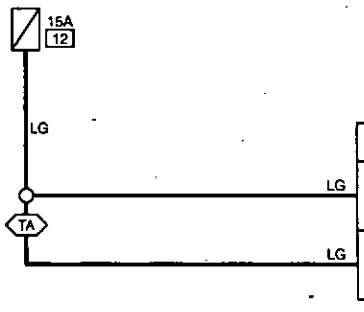

Connector No.	Terminal No.	Connect to
M46	19	AUDIO UNIT
M50	1	TEL ADAPTER

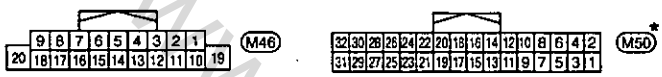

★ : This connector is not shown in "Harness Layout" PG section.

JMMWA0106GI

www.CarGarage.ir

BATTERY POWER SUPPLY FUSE NO.45

HA : With headlamp auto aiming

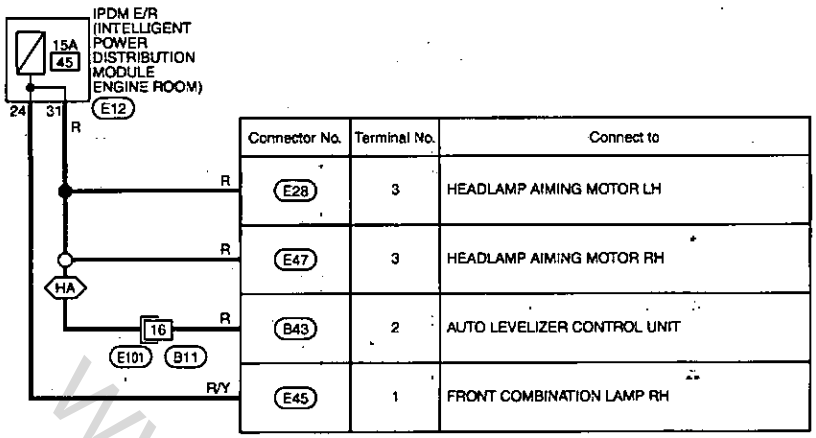

Connector No.	Terminal No.	Connect to
E28	3	HEADLAMP AIMING MOTOR LH
E47	3	HEADLAMP AIMING MOTOR RH
B43	2	AUTO LEVELIZER CONTROL UNIT
E45	1	FRONT COMBINATION LAMP RH

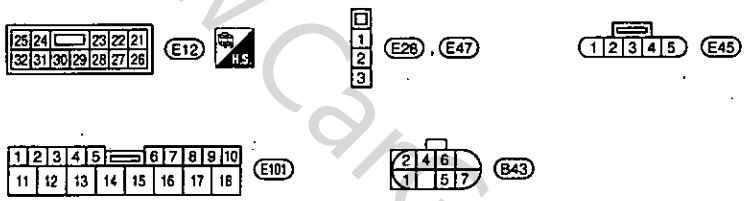

JMMWA0107GI

www.CarGarage.ir

www.CarGarage.ir

BATTERY POWER SUPPLY FUSE NO.49

C : With CVT
4W : 4WD models
VD : With VDC
AA : With auto A/C
MA : With manual A/C
HM : With headlamp manual aiming
HS : With heated seat
ME : For the Middle East
XM : Except for the Middle East

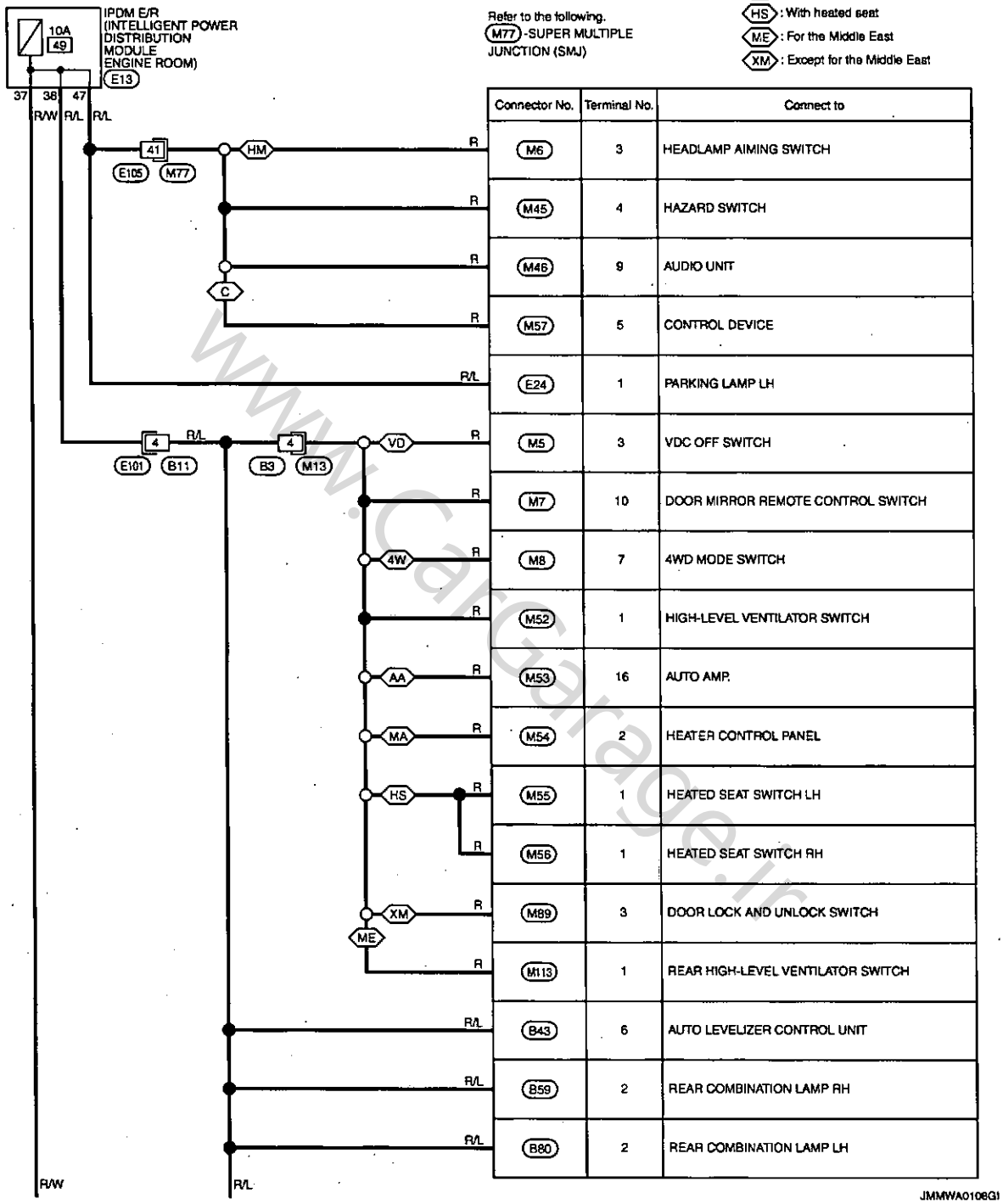

Refer to the following.
M77 -SUPER MULTIPLE JUNCTION (SMJ)

Connector No.	Terminal No.	Connect to
M6	3	HEADLAMP AIMING SWITCH
M45	4	HAZARD SWITCH
M46	9	AUDIO UNIT
M57	5	CONTROL DEVICE
E24	1	PARKING LAMP LH
M5	3	VDC OFF SWITCH
M7	10	DOOR MIRROR REMOTE CONTROL SWITCH
M8	7	4WD MODE SWITCH
M52	1	HIGH-LEVEL VENTILATOR SWITCH
M53	16	AUTO AMP.
M54	2	HEATER CONTROL PANEL
M55	1	HEATED SEAT SWITCH LH
M56	1	HEATED SEAT SWITCH RH
M89	3	DOOR LOCK AND UNLOCK SWITCH
M113	1	REAR HIGH-LEVEL VENTILATOR SWITCH
B43	6	AUTO LEVELIZER CONTROL UNIT
B59	2	REAR COMBINATION LAMP RH
B80	2	REAR COMBINATION LAMP LH

JMMWA0108GI

www.CarGarage.ir

www.CarGarage.ir

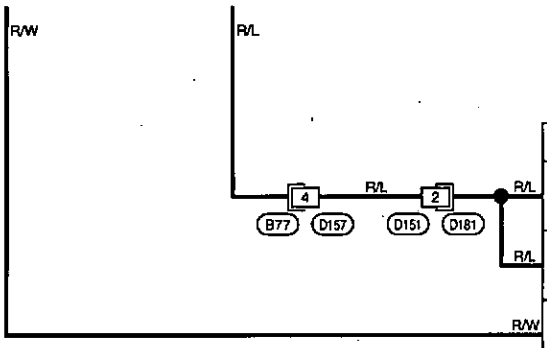

Connector No.	Terminal No.	Connect to
D184	1	LICENSE PLATE LAMP LH
D185	1	LICENSE PLATE LAMP RH
E43	1	PARKING LAMP RH

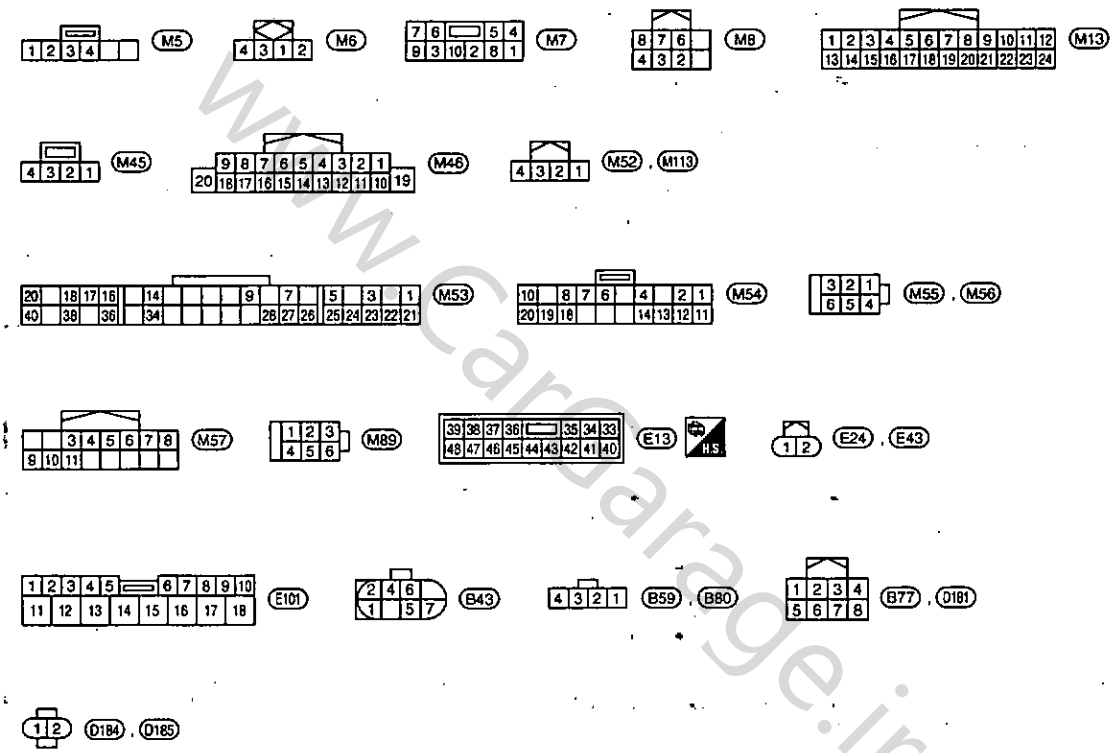

JMMWA0109GI

www.CarGarage.ir

www.CarGarage.ir

BATTERY POWER SUPPLY FUSE NO.52

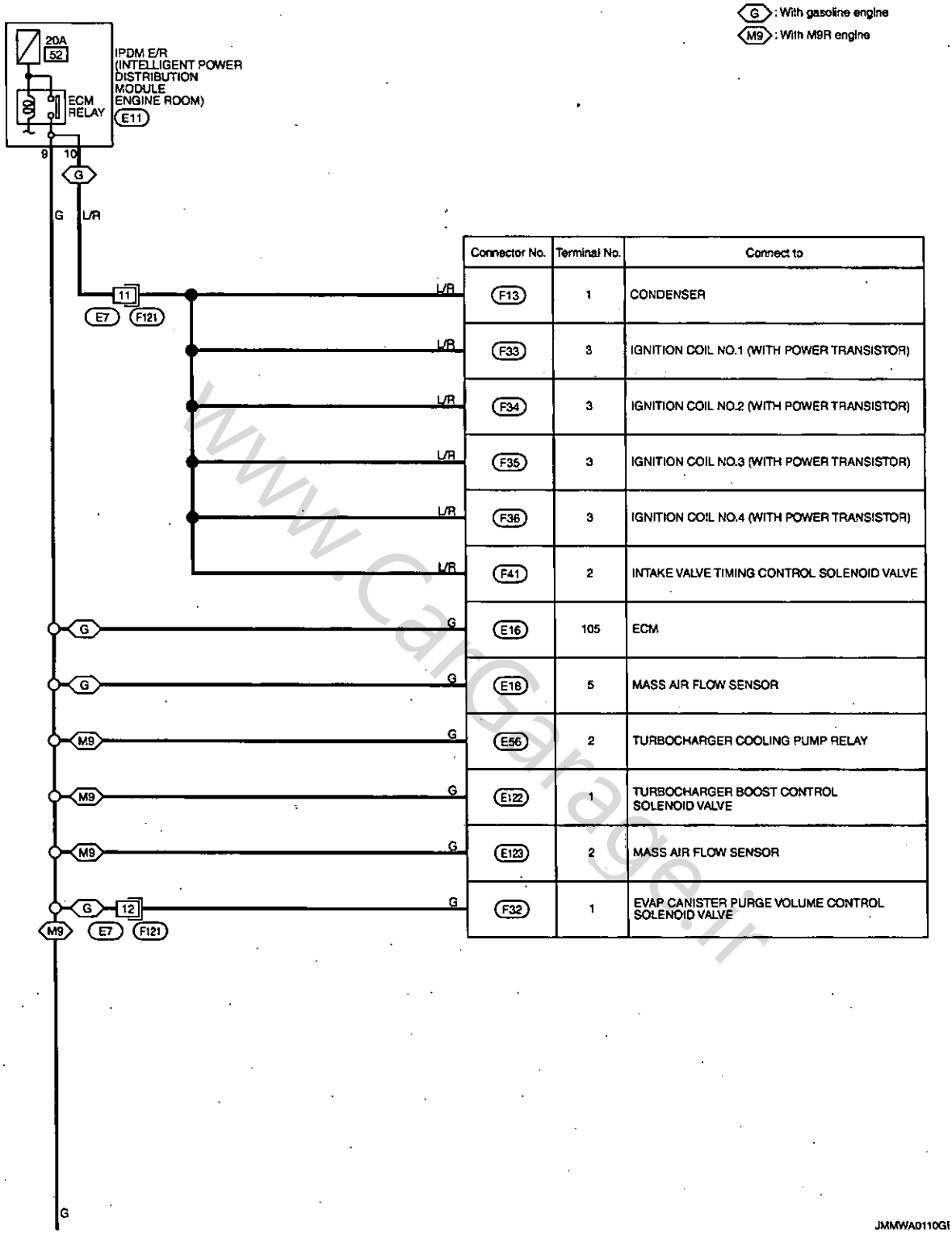

Connector No.	Terminal No.	Connect to
F13	1	CONDENSER
F33	3	IGNITION COIL NO.1 (WITH POWER TRANSISTOR)
F34	3	IGNITION COIL NO.2 (WITH POWER TRANSISTOR)
F35	3	IGNITION COIL NO.3 (WITH POWER TRANSISTOR)
F36	3	IGNITION COIL NO.4 (WITH POWER TRANSISTOR)
F41	2	INTAKE VALVE TIMING CONTROL SOLENOID VALVE
E16	105	ECM
E18	5	MASS AIR FLOW SENSOR
E56	2	TURBOCHARGER COOLING PUMP RELAY
E122	1	TURBOCHARGER BOOST CONTROL SOLENOID VALVE
E123	2	MASS AIR FLOW SENSOR
F32	1	EVAP CANISTER PURGE VOLUME CONTROL SOLENOID VALVE

JMMWA0110GI

www.CarGarage.ir

www.CarGarage.ir

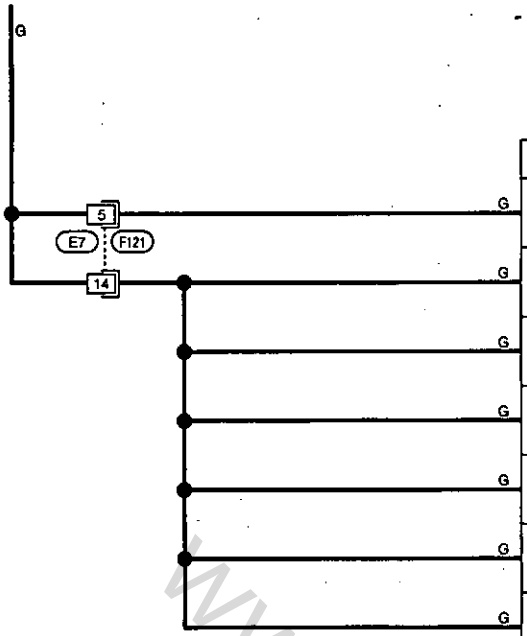

Connector No.	Terminal No.	Connect to
F132	94	ECM
F132	93	ECM
F138	3	CAMSHAFT POSITION SENSOR
F141	4	AIR FUEL RATIO SENSOR
F143	1	FUEL PUMP
F149	1	FUEL RAIL PRESSURE CONTROL VALVE
F151	1	EGR COOLER BYPASS VALVE CONTROL SOLENOID VALVE

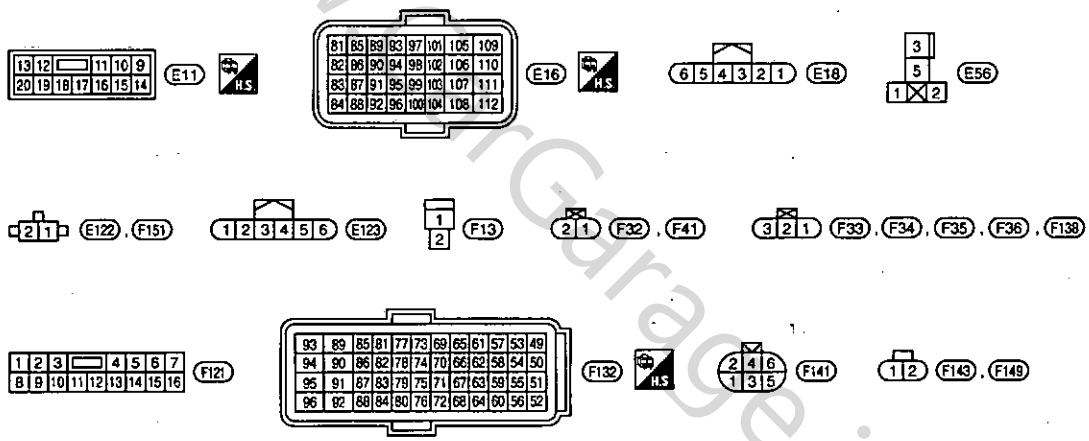

JMMWA0111GI

www.CarGarage.ir

Wiring Diagram - ACCESSORY POWER SUPPLY -

INFOID:0000000004897452

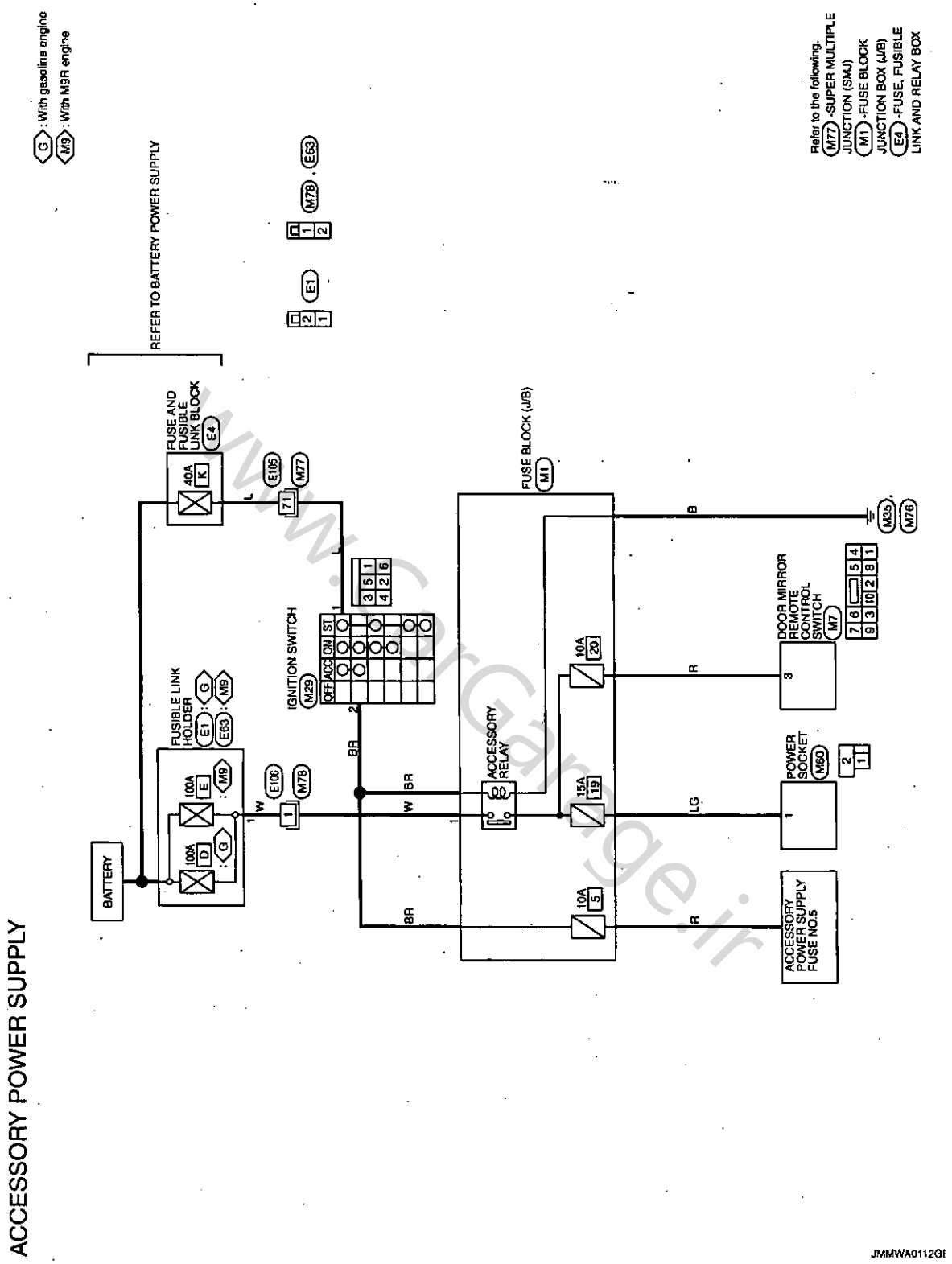

ACCESSORY POWER SUPPLY

www.CarGarage.ir

ACCESSORY POWER SUPPLY FUSE NO.5

TA : With TEL adapter

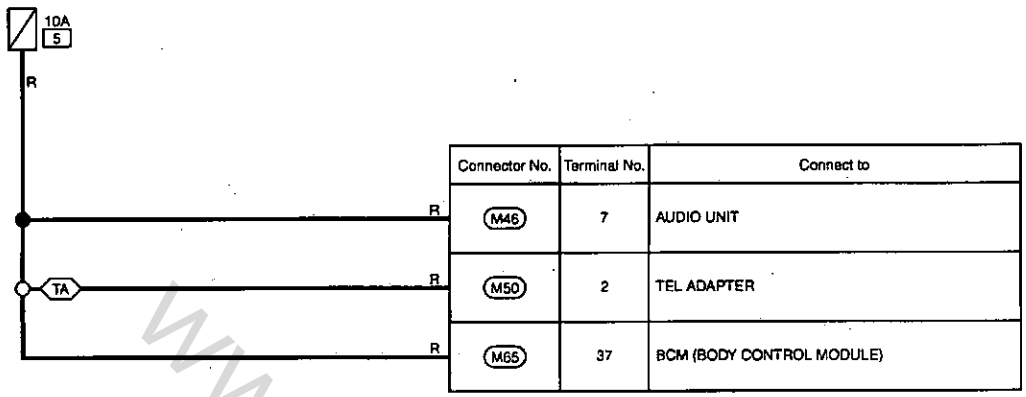

Connector No.	Terminal No.	Connect to
M46	7	AUDIO UNIT
M50	2	TEL ADAPTER
M65	37	BCM (BODY CONTROL MODULE)

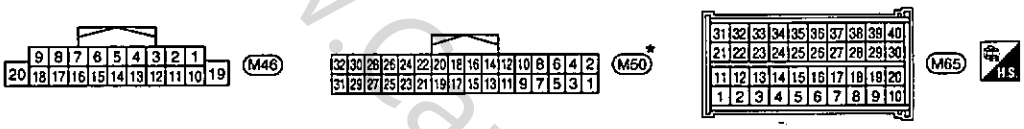

★ : This connector is not shown in "Harness Layout" PG section.

JMMWA0113GI

www.CarGarage.ir

Wiring Diagram - IGNITION POWER SUPPLY -

INFOID:0000000004697453

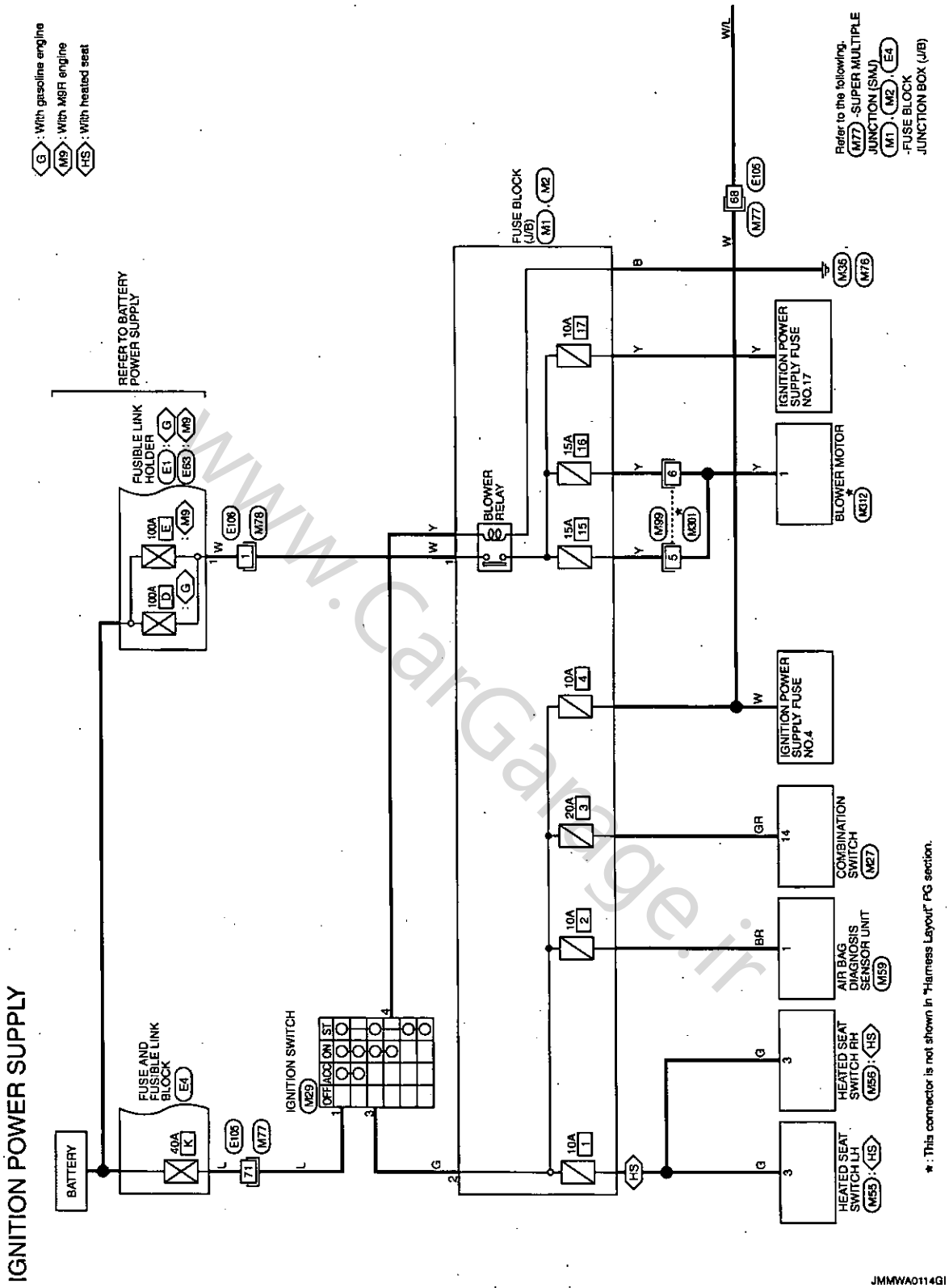

www.CarGarage.ir

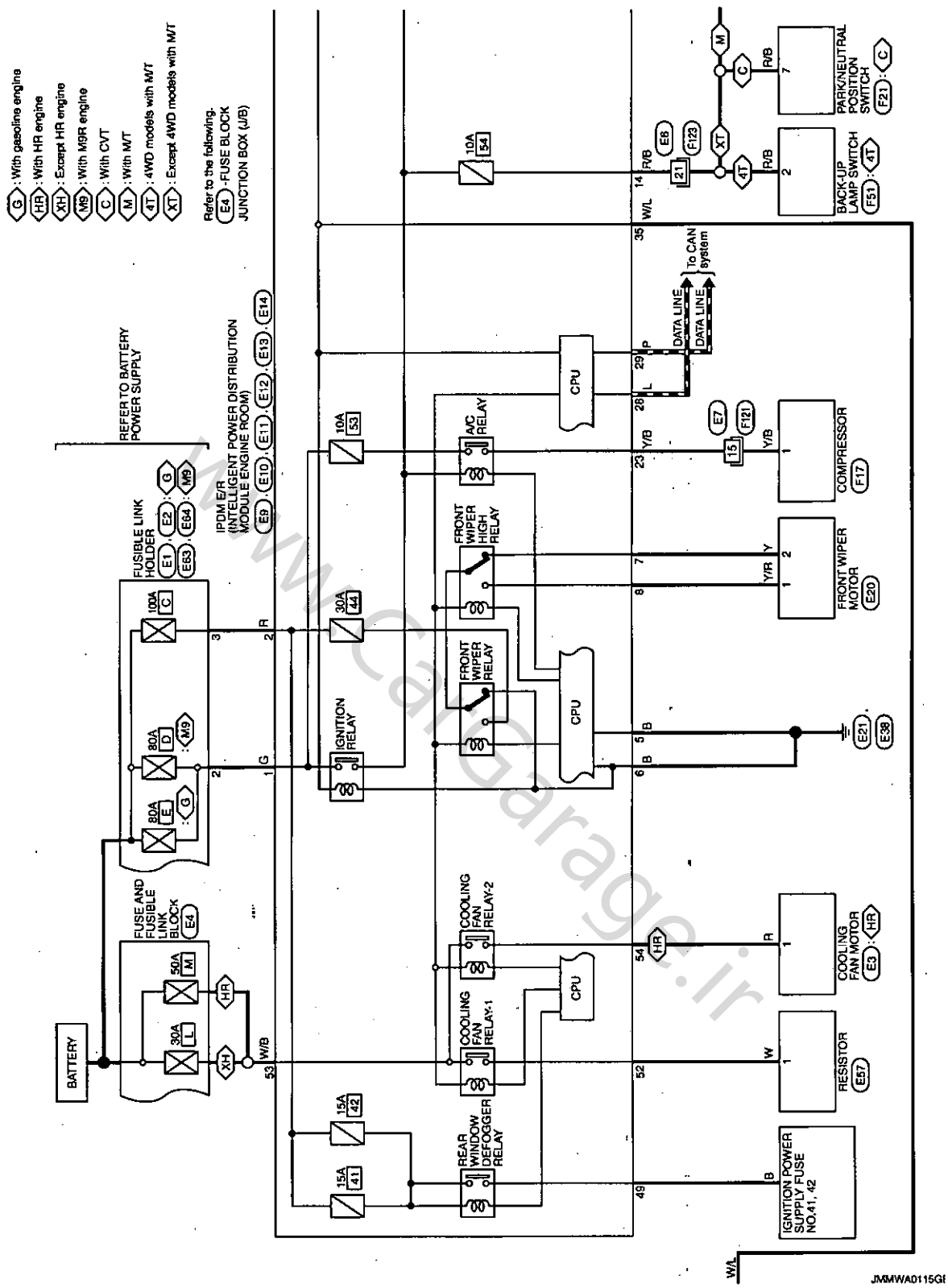

www.CarGarage.ir

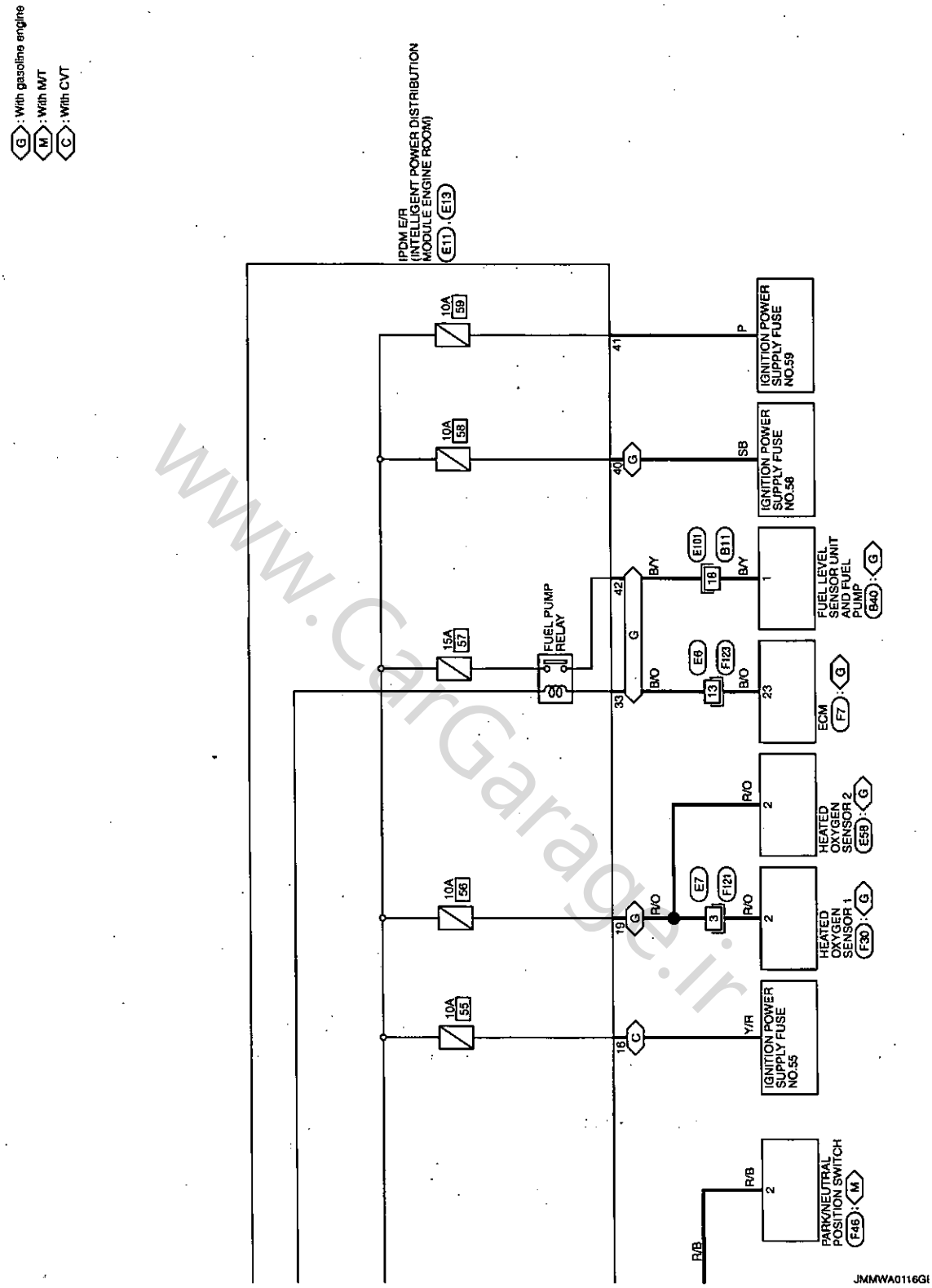

www.CarGarage.ir

www.CarGarage.ir

IGNITION POWER SUPPLY

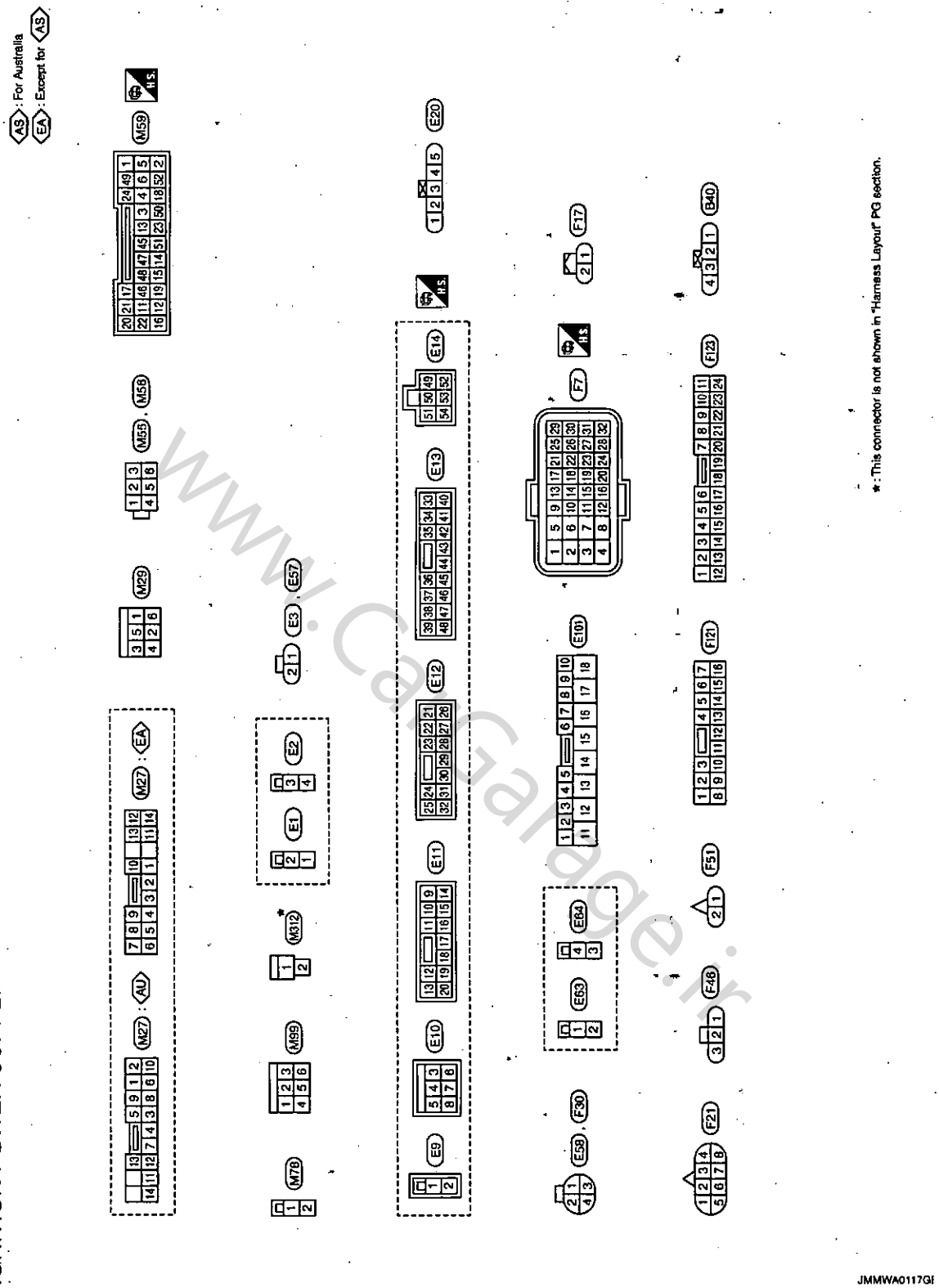

★ : This connector is not shown in "Harness Layout" PG section.

www.CarGarage.ir

IGNITION POWER SUPPLY FUSE NO.4

- G : With gasoline engine
- M9 : With M9R engine
- C : With CVT
- M : With M/T
- IK : With Intelligent Key
- AA : With auto A/C
- OA : Without auto A/C
- GA : With gasoline engine and ASCD
- XM : Except for the Middle East with auto A/C
- TA : With TEL adapter

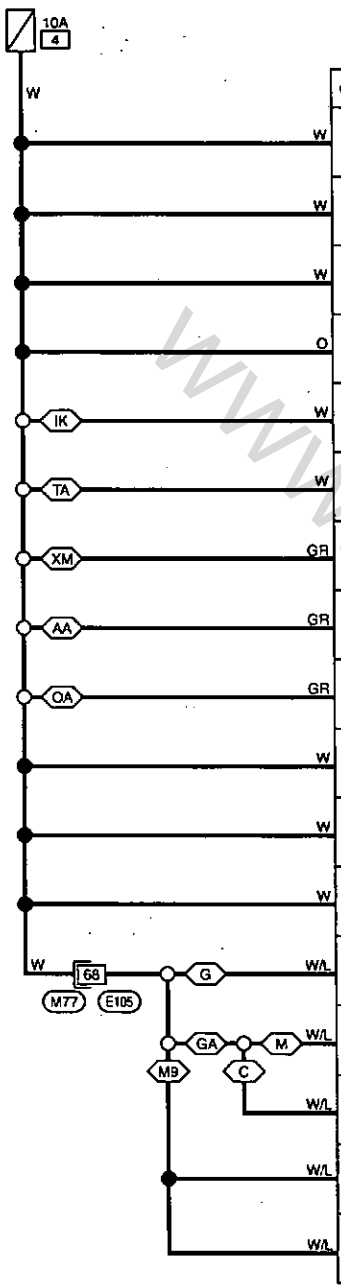

Connector No.	Terminal No.	Connect to
M4	8	DATA LINK CONNECTOR
M33	27	COMBINATION SWITCH (SPIRAL CABLE)
M34	2	COMBINATION METER
M37	10	EPS CONTROL UNIT
M40	6	INTELLIGENT KEY UNIT
M50	3	TEL ADAPTER
M52	4	HIGH-LEVEL VENTILATOR SWITCH
M53	40	AUTO AMP.
M54	1	HEATER CONTROL PANEL
M65	38	BCM (BODY CONTROL MODULE)
M73	1	GLOVE BOX LAMP
M91	7	INDICATOR UNIT
E16	93	ECM
E111	1	ASCD CLUTCH SWITCH
E112	1	ASCD BRAKE SWITCH
E116	4	STOP LAMP SWITCH
E121	109	ECM

Refer to the following.
M77 -SUPER MULTIPLE JUNCTION (SMJ)

JMMWA0118GI

www.CarGarage.ir

IGNITION POWER SUPPLY FUSE NO.4

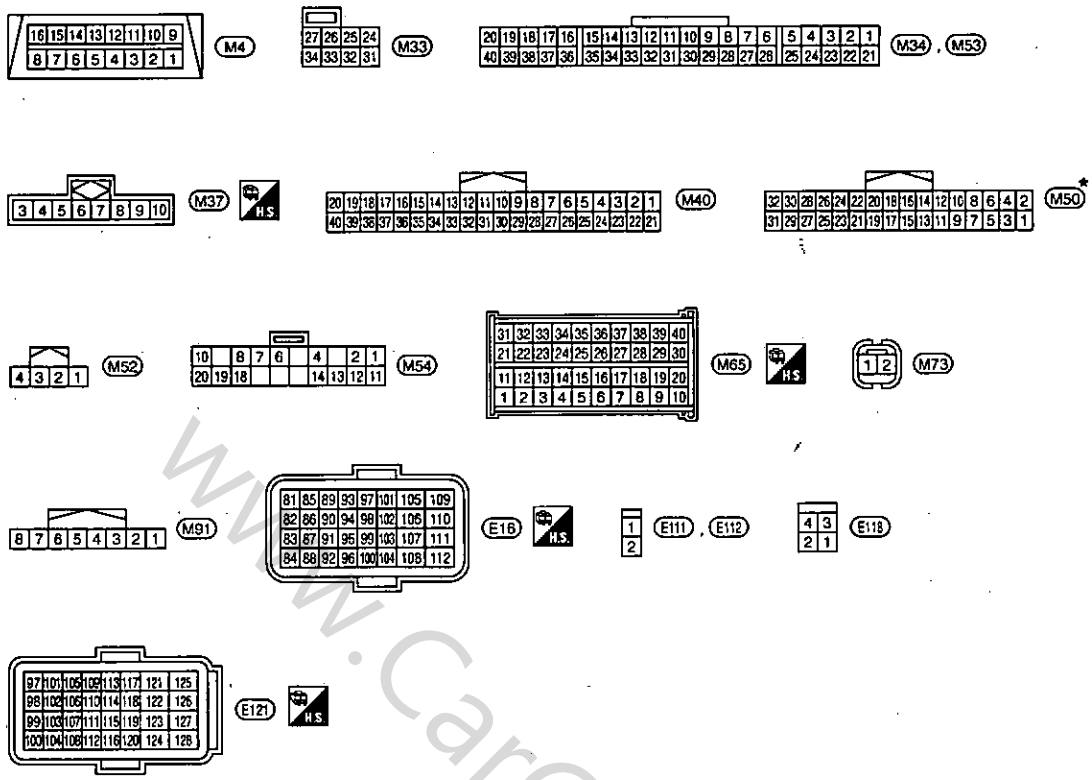

★: This connector is not shown in "Harness Layout" PG section.

JMMWA0119GI

www.CarGarage.ir

www.CarGarage.ir

IGNITION POWER SUPPLY FUSE NO.17

D : With diesel engine
AA : With auto A/C

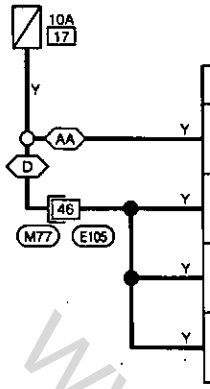

Connector No.	Terminal No.	Connect to
M53	18	AUTO AMP.
E53	1	PTC RELAY-1
E54	1	PTC RELAY-2
E126	1	PTC RELAY-3

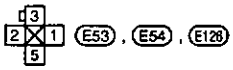

Refer to the following.
M77 -SUPER MULTIPLE JUNCTION (SMJ)

JMMWA0120GI

www.CarGarage.ir

IGNITION POWER SUPPLY FUSE NO.41,42

AA : With auto A/C
OA : Without auto A/C

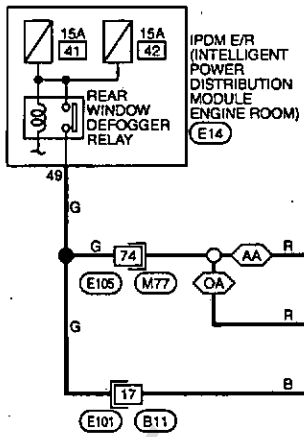

Connector No.	Terminal No.	Connect to
M53	22	AUTO AMP.
M54	19	HEATER CONTROL PANEL
B58	1	REAR WINDOW DEFOGGER

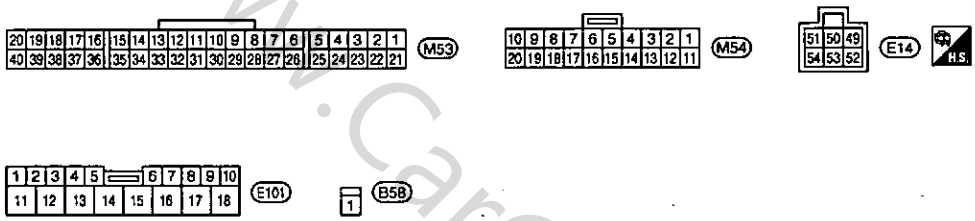

Refer to the following.
M77 -SUPER MULTIPLE JUNCTION (SMJ)

JMMWA0121GI

www.CarGarage.ir

www.CarGarage.ir

IGNITION POWER SUPPLY FUSE NO.55

C : With CVT

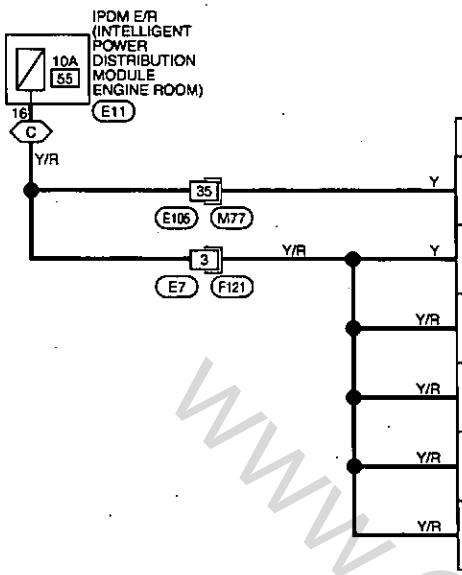

Connector No.	Terminal No.	Connect to
M57	3	CONTROL DEVICE
F19	3	SECONDARY SPEED SENSOR
F21	5	PARK/NEUTRAL POSITION SWITCH
F25	46	TCM (TRANSMISSION CONTROL MODULE)
F25	48	TCM (TRANSMISSION CONTROL MODULE)
F55	3	PRIMARY SPEED SENSOR

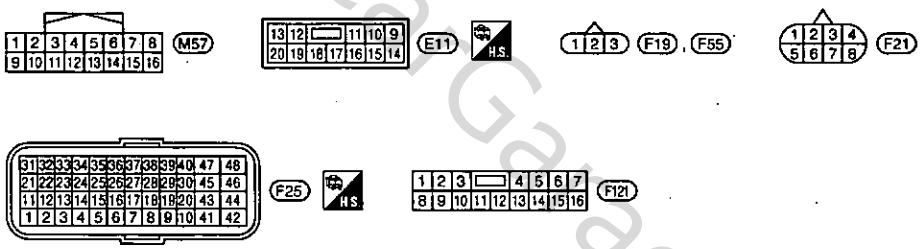

Refer to the following.
M77 -SUPER MULTIPLE JUNCTION (SMJ)

JMMWA0122GI

www.CarGarage.ir

IGNITION POWER SUPPLY FUSE NO.58

G : With gasoline engine

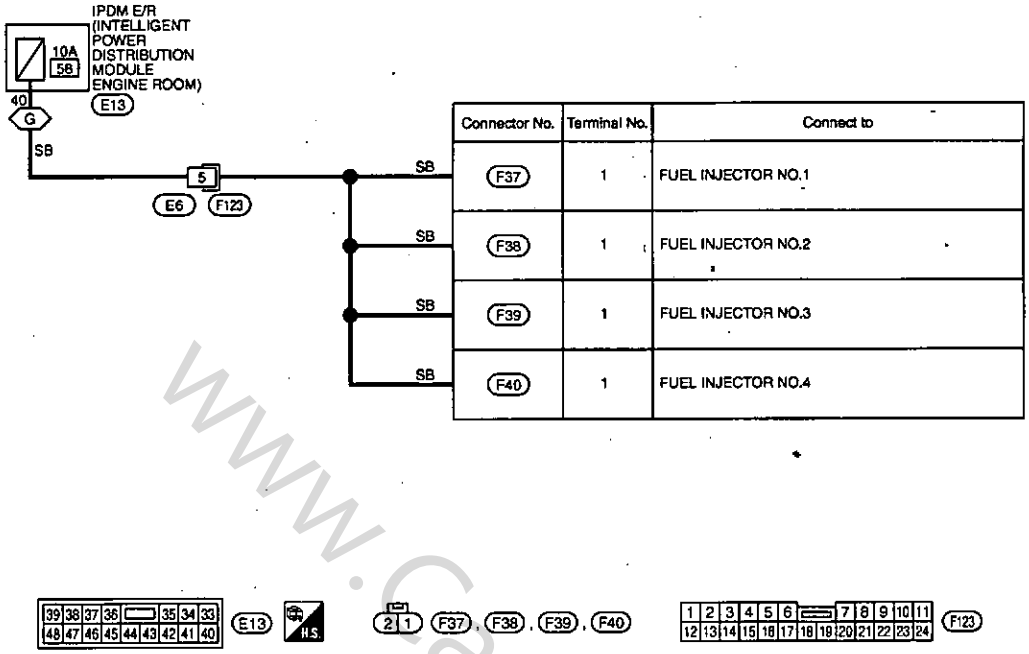

Connector No.	Terminal No.	Connect to
F37	1	FUEL INJECTOR NO.1
F38	1	FUEL INJECTOR NO.2
F39	1	FUEL INJECTOR NO.3
F40	1	FUEL INJECTOR NO.4

JMMWA0123GI

www.CarGarage.ir

www.CarGarage.ir

IGNITION POWER SUPPLY FUSE NO.59

4W : 4WD models
VD : With VDC
OV : Without VDC

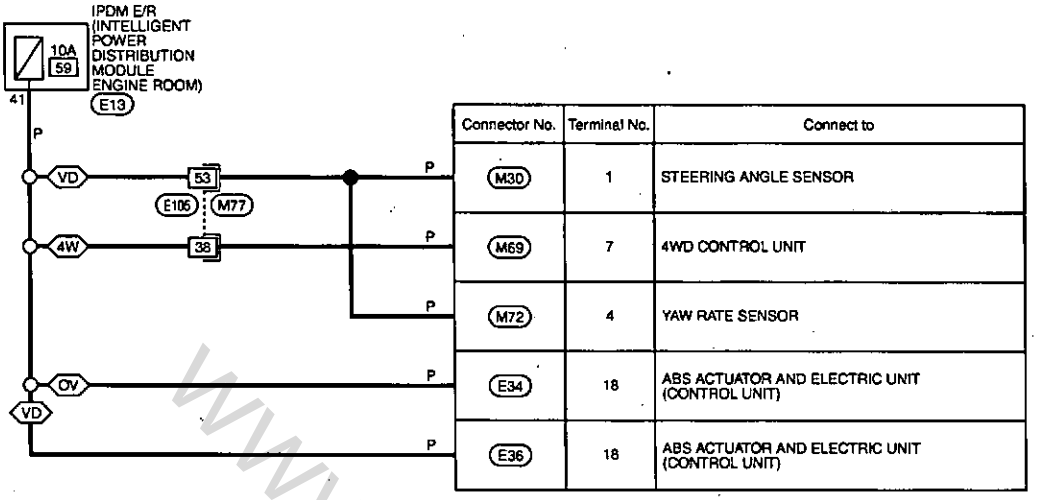

Connector No.	Terminal No.	Connect to
M30	1	STEERING ANGLE SENSOR
M69	7	4WD CONTROL UNIT
M72	4	YAW RATE SENSOR
E34	18	ABS ACTUATOR AND ELECTRIC UNIT (CONTROL UNIT)
E36	18	ABS ACTUATOR AND ELECTRIC UNIT (CONTROL UNIT)

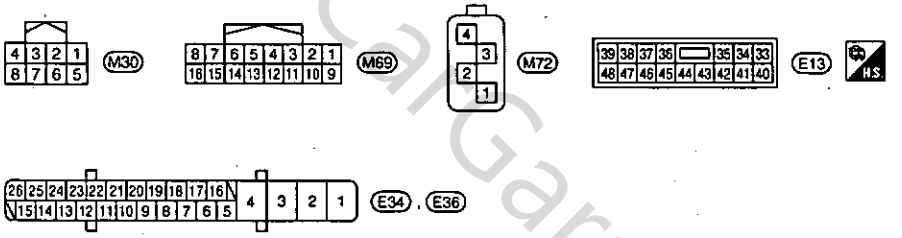

Refer to the following.
M77 -SUPER MULTIPLE JUNCTION (SMJ)

JMMWA0124GI

www.CarGarage.ir

www.CarGarage.ir

Fuse

INFOID:0000000004897454

- If fuse is blown, be sure to eliminate cause of malfunction before installing new fuse.
- Use fuse of specified rating. Never use fuse of more than specified rating.
- Do not partially install fuse; always insert it into fuse holder properly.
- Remove fuse for "ELECTRICAL PARTS (BAT)" if vehicle is not used for a long period of time.

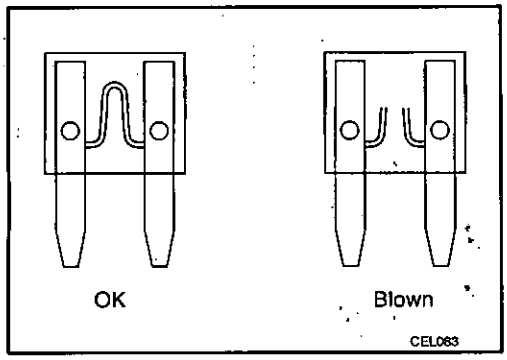

Fusible Link

INFOID:0000000004897455

A melted fusible link can be detected either by visual inspection or by feeling with finger tip. If its condition is questionable, use circuit tester or test lamp.

CAUTION:

- **If fusible link should melt, it is possible that critical circuit (power supply or large current carrying circuit) is shorted. In such a case, carefully check and eliminate cause of malfunction.**
- **Never wrap outside of fusible link with vinyl tape. Important: Never let fusible link touch any other wiring harness, vinyl or rubber parts.**

Circuit Breaker

INFOID:0000000004897456

The PTC thermistor generates heat in response to current flow. The temperature (and resistance) of the thermistor element varies with current flow. Excessive current flow will cause the element's temperature to rise. When the temperature reaches a specified level, the electrical resistance will rise sharply to control the circuit current. Reduced current flow will cause the element to cool. Resistance falls accordingly and normal circuit current flow is allowed to resume.

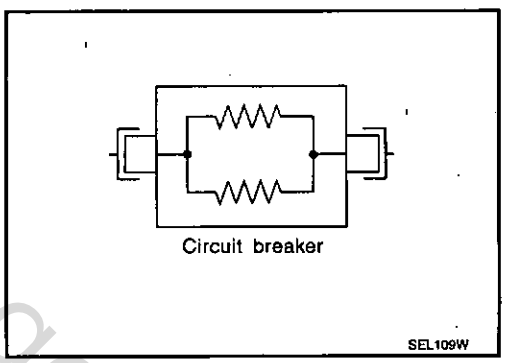

www.CarGarage.ir

www.CarGarage.ir

HARNESS LAYOUT

LHD

LHD : How To Read Harness Layout

INFOID:0000000004897457

The following Harness Layouts use a map style grid to help locate connectors on the drawings:
- Main Harness
- Engine Room Harness
- Engine Control Harness
- Body Harness
- Room Lamp Harness
- Door Harness

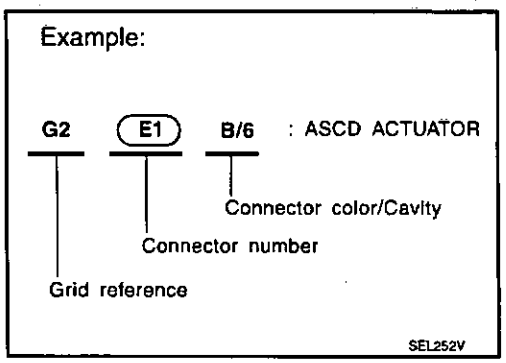

To use the grid reference

1. Find the desired connector number on the connector list.
2. Find the grid reference.
3. On the drawing, find the crossing of the grid reference letter column and number row.
4. Find the connector number in the crossing zone.
5. Follow the line (if used) to the connector.

CONNECTOR SYMBOL

Main symbols of connector (in Harness Layout) are indicated below.

Connector type	Water proof type		Standard type	
	Male	Female	Male	Female
• Cavity: Less than 4 • Relay connector				
• Cavity: From 5 to 8				
• Cavity: More than 9				
• Ground terminal etc.	—			

www.CarGarage.ir

www.CarGarage.ir

LHD : Outline

INFOID:0000000004897458

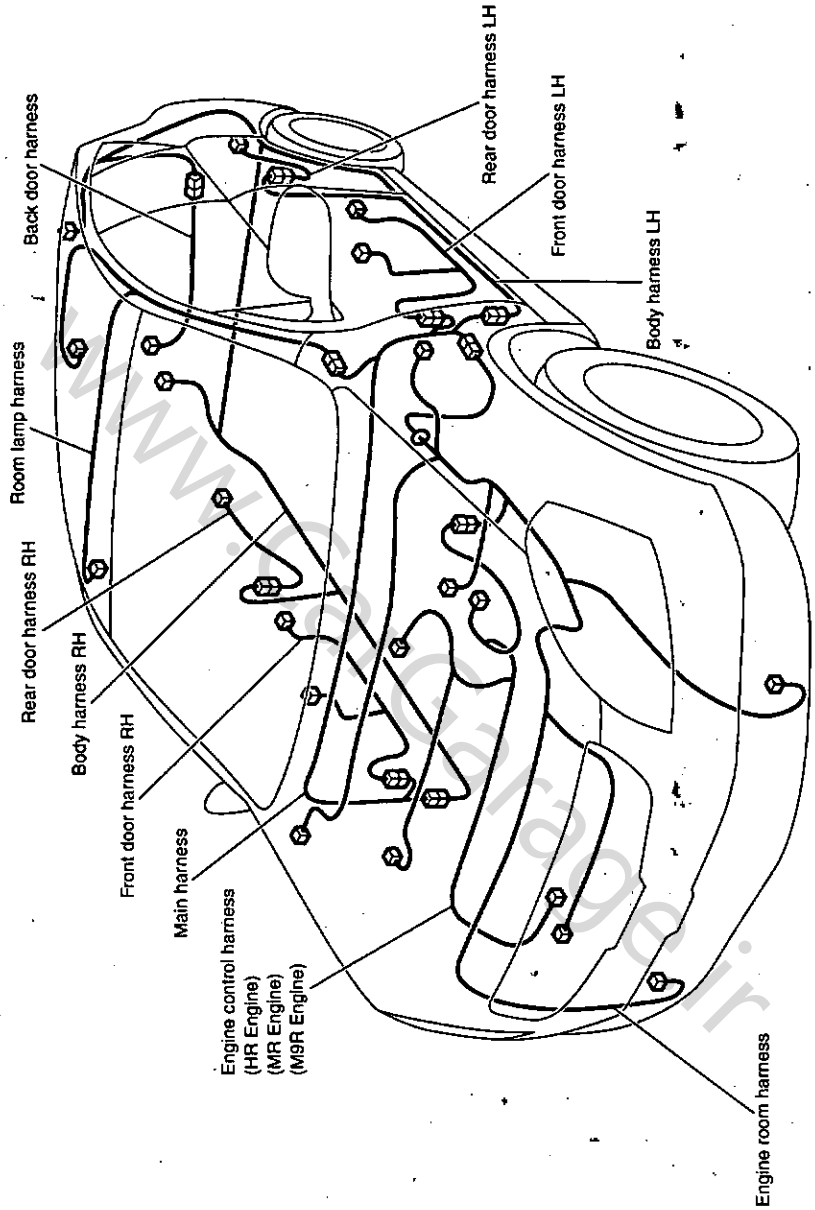

JMMWA0127GI

www.CarGarage.ir

www.CarGarage.ir

LHD : Main Harness

INFOID:0000000004697459

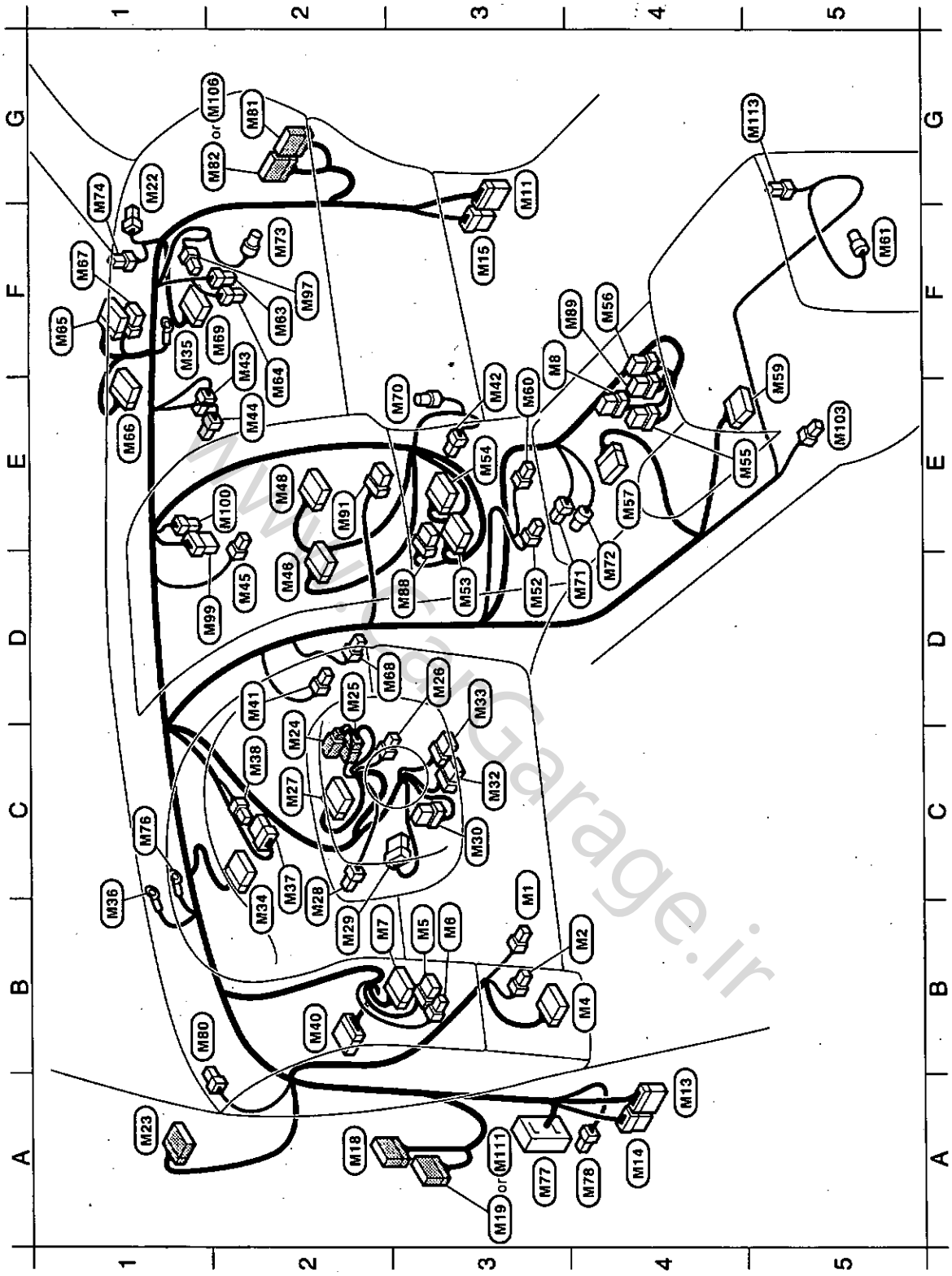

www.CarGarage.ir

C3	M1	–/1	:	Fuse block (J/B)
B4	M2	–/1	:	Fuse block (J/B)
B4	M4	B/16	:	Data link connector
B3	M5	GR/6	:	VDC off switch (With VDC)
B3	M6	W/4	:	Headlamp aiming switch (With headlamp Manual aiming)
B2	M7	W/10	:	Door mirror remote control switch
F3	M8	W/8	:	4WD mode switch (4WD models)
G3	M11	W/24	:	To B1
A4	M13	W/24	:	To B3
A4	M14	W/8	:	To B4
F3	M15	W/8	:	To B5
A2	M18	W/16	:	To D1 (With Intelligent Key system)
A3	M19	W/10	:	To D2
G1	M22	–/2	:	Tweeter RH
A1	M23	W/18	:	To R1
C2	M24	W/2	:	Key switch (Without Intelligent Key system)
D2	M25	GR/6	:	Ignition knob switch, key switch and key lock solenoid (With Intelligent Key system)
D3	M26	W/4	:	NATS antenna amp.
C2	M27	W/16	:	Combination switch
B2	M28	W/4	:	Steering lock unit (With Intelligent Key system)
B2	M29	W/6	:	Ignition switch
C3	M30	W/8	:	Steering angle sensor (With VDC)
C3	M32	Y/6	:	Combination switch (Spiral cable)
D3	M33	GR/8	:	Combination switch (Spiral cable)
B2	M34	W/40	:	Combination meter
F1	M35	–	:	Body ground
B1	M36	–	:	Body ground
C2	M37	–/8	:	EPS control unit
C2	M38	–/2	:	EPS control unit
B2	M40	W/40	:	Intelligent Key unit (With Intelligent Key system)
D2	M41	W/2	:	In-vehicle sensor (With auto A/C)
E3	M42	W/2	:	Intake sensor (With auto A/C)
F2	M43	B/2	:	High-level ventilator door motor (Without auto A/C)
E2	M44	W/3	:	High-level ventilator door motor (With auto A/C)
D2	M45	W/4	:	Hazard switch
D2	M46	W/20	:	Audio unit
E2	M48	W/12	:	Audio unit
D3	M52	–/4	:	High-level ventilator switch
D3	M53	W/40	:	Auto AMP. (With auto A/C)
E3	M54	GR/20	:	Heater control panel (Without auto A/C)
E5	M55	BR/6	:	Heated seat switch LH (With heated seat)
F4	M56	B/6	:	Heated seat switch RH (With heated seat)
E4	M57	W/16	:	Control device (With CVT)
F5	M59	Y/28	:	Air bag diagnosis sensor unit
E3	M60	B/2	:	Power socket
F5	M61	GR/2	:	Inside key antenna (Console) (With Intelligent Key system)
F2	M63	–/2	:	Front passenger air bag module
E2	M64	–/1	:	Front passenger air bag module
F1	M65	B/40	:	BCM (Body control module)
E1	M66	–/12	:	BCM (Body control module)
F1	M67	–/8	:	BCM (Body control module)
D2	M68	B/2	:	Intake door motor (Without auto A/C)
F2	M69	W/16	:	4WD control unit (4WD models)
E3	M70	GR/2	:	Inside key antenna (Instrument center) (With Intelligent Key system)
D4	M71	BR/3	:	G sensor (4WD models)
D4	M72	B/4	:	YAW rate sensor (With VDC)
F2	M73	–/2	:	Glove box lamp
G1	M74	B/2	:	Sunload sensor (With auto A/C)
C1	M76	–	:	Body ground
A3	M77	SMJ	:	To E105
A4	M78	B/2	:	To E106
B1	M80	–/2	:	Tweeter LH
G2	M81	W/16	:	To D41 (With Intelligent Key system)
G2	M82	W/10	:	To D42
D3	M88	–/8	:	Fan switch (Without auto A/C)
F4	M89	–/6	:	Door lock and unlock switch (Except for the Middle East)
E2	M91	W/8	:	Indicator unit
F2	M97	Y/2	:	To M202
D1	M99	W/6	:	To M301
E2	M100	W/3	:	To M302
E5	M103	B/1	:	Parking brake switch
G2	M106	W/12	:	To D51 (Without Intelligent Key system)
A3	M111	W/12	:	To D12 (Without Intelligent Key system)
G5	M113	–/4	:	Rear high-level ventilator switch (For the Middle East)

JWWW0130GB

www.CarGarage.ir

www.CarGarage.ir

LHD : Engine Room Harness

INFOID:0000000004897460

ENGINE COMPARTMENT

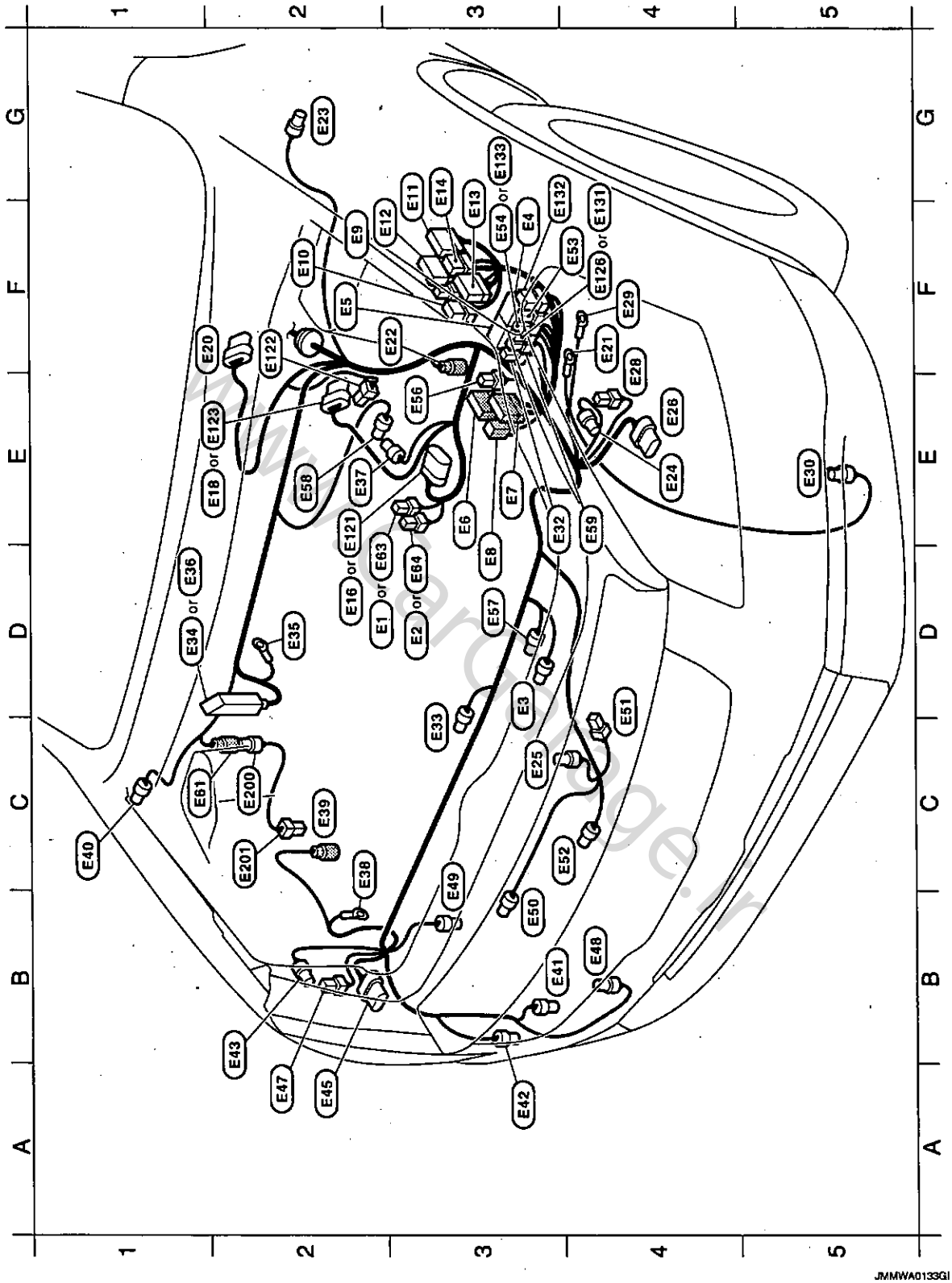

JMMWA0133GI

D2	E1	GR/2	:	Fusible link holder (With gasoline engine)
D3	E2	BR/2	:	Fusible link holder (With gasoline engine)
D3	E3	–/2	:	Cooling fan motor
F3	E4	–	:	Fuse and fusible link block
F2	E5	–/3	:	Horn relay
E3	E6	W/24	:	To F123
E3	E7	W/16	:	To F121
D3	E8	W/2	:	To F122
F2	E9	B/2	:	IPDM E/R (Intelligent power distribution module engine room)
F2	E10	B/6	:	IPDM E/R (Intelligent power distribution module engine room)
G3	E11	BR/12	:	IPDM E/R (Intelligent power distribution module engine room)
F3	E12	W/12	:	IPDM E/R (Intelligent power distribution module engine room)
F3	E13	W/16	:	IPDM E/R (Intelligent power distribution module engine room)
G3	E14	–/6	:	IPDM E/R (Intelligent power distribution module engine room)
D2	E16	B/32	:	ECM (With gasoline engine)
E2	E18	B/6	:	Mass air flow sensor (With gasoline engine)
F2	E20	–/5	:	Front wiper motor
F4	E21	–	:	Body ground
F3	E22	GR/2	:	Front wheel sensor LH
G2	E23	–/2	:	Side turn signal lamp LH
E4	E24	B/2	:	Parking lamp LH
C3	E25	BR/3	:	Intelligent Key warning buzzer (With Intelligent Key system)
E4	E26	–/5	:	Front combination lamp LH
F4	E28	–/3	:	Headlamp aiming motor LH
F4	E29	–	:	Body ground
E5	E30	–/2	:	Front fog lamp LH
E3	E32	L/4	:	Headlamp washer relay
C3	E33	Y/2	:	Crash zone sensor
D1	E34	–/26	:	ABS actuator and electric unit (Control unit) (Without VDC)
D2	E35	–	:	Body ground
D1	E36	–/26	:	ABS actuator and electric unit (Control unit) (With VDC)
E2	E37	GR/2	:	Brake fluid level switch
C2	E38	–	:	Body ground
C2	E39	GR/2	:	Front wheel sensor RH
C1	E40	–/2	:	Side turn signal lamp RH
B3	E41	B/2	:	Washer pump
A3	E42	–/2	:	Headlamp washer pump
B2	E43	B/2	:	Parking lamp RH
A2	E45	–/5	:	Front combination lamp RH
A2	E47	–/3	:	Headlamp aiming motor RH
B4	E48	–/2	:	Front fog lamp RH
C3	E49	B/3	:	Refrigerant pressure sensor (With gasoline engine)
B3	E50	–/3	:	Refrigerant pressure sensor (With M9R engine)
D4	E51	–/2	:	Horn
C4	E52	B/4	:	OAT sensor
F4	E53	–/4	:	PTC relay-1 (With M9R engine)
F3	E54	–/4	:	PTC relay-2 (With M9R engine)
E3	E56	L/4	:	Turbocharger cooling pump relay (With M9R engine)
D3	E57	–/3	:	Resistor
E2	E58	B/4	:	Heated oxygen sensor 2
E4	E59	–/4	:	Cooling fan relay-3
C1	E61	B/3	:	To E200 (With M9R engine)
D2	E63	BR/2	:	Fusible link holder (With M9R engine)
D3	E64	GR/2	:	Fusible link holder (With M9R engine)
E2	E121	B/32	:	ECM (With M9R engine)
F2	E122	B/2	:	Turbocharger boost control solenoid valve (With M9R engine)
E2	E123	–/5	:	Mass air flow meter (With M9R engine)
F4	E126	–/4	:	PTC relay-3 (With M9R engine)
F4	E131	L/4	:	AUX lock control relay-1 (For the Middle East)
G4	E132	BR/6	:	AUX lock control relay-2 (For the Middle East)
G3	E133	L/4	:	AUX lock control relay-3 (For the Middle East)
C2	E200	B/3	:	To E61 (With M9R engine)
C2	E201	B/3	:	Water in fuel sensor (With M9R engine)

JMMWA0134GI

www.CarGarage.ir

www.CarGarage.ir

PASSENGER COMPARTMENT

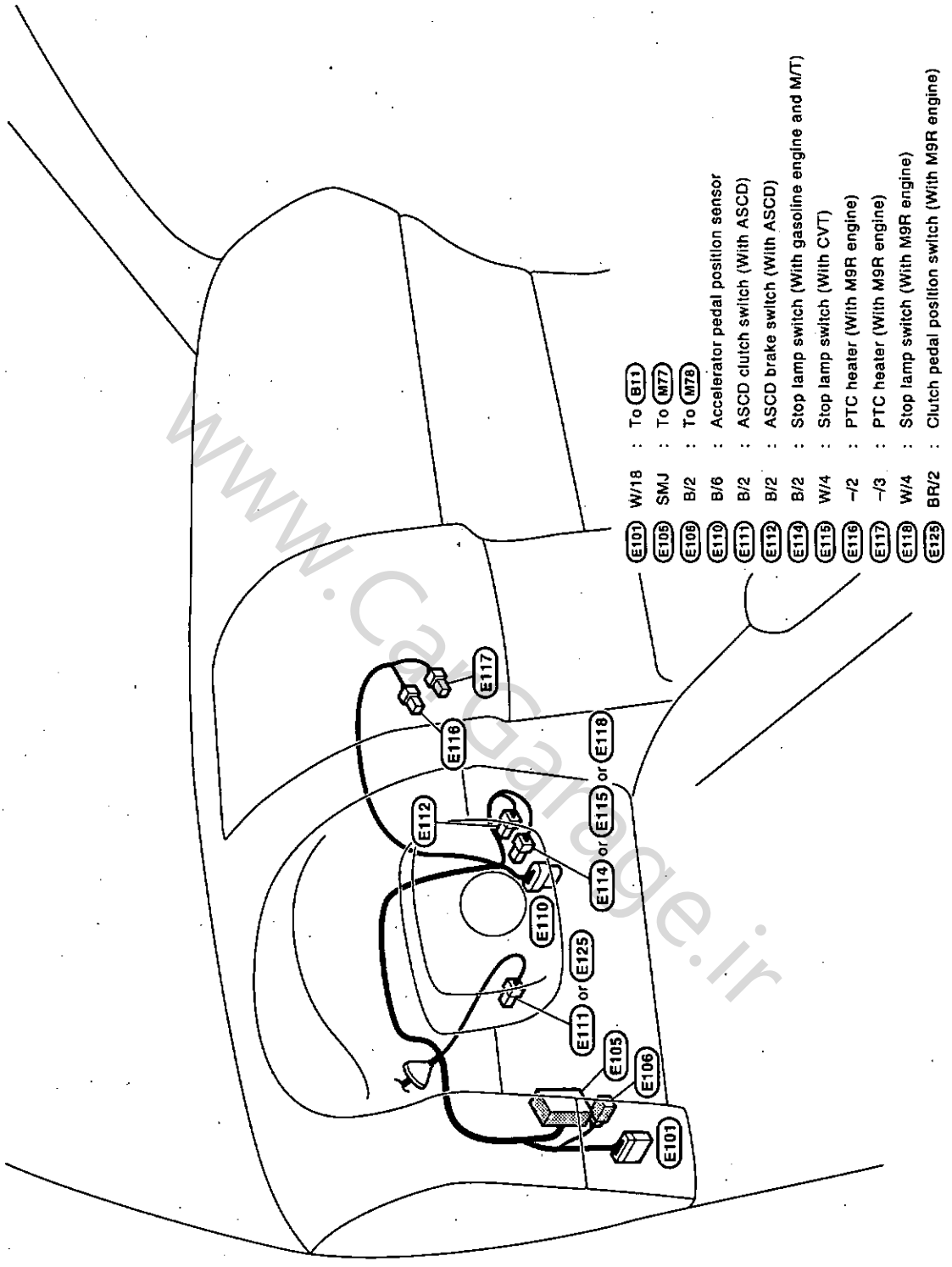

www.CarGarage.ir

www.CarGarage.ir

LHD : Engine Control Harness

INFOID:0000000004897461

HR ENGINE

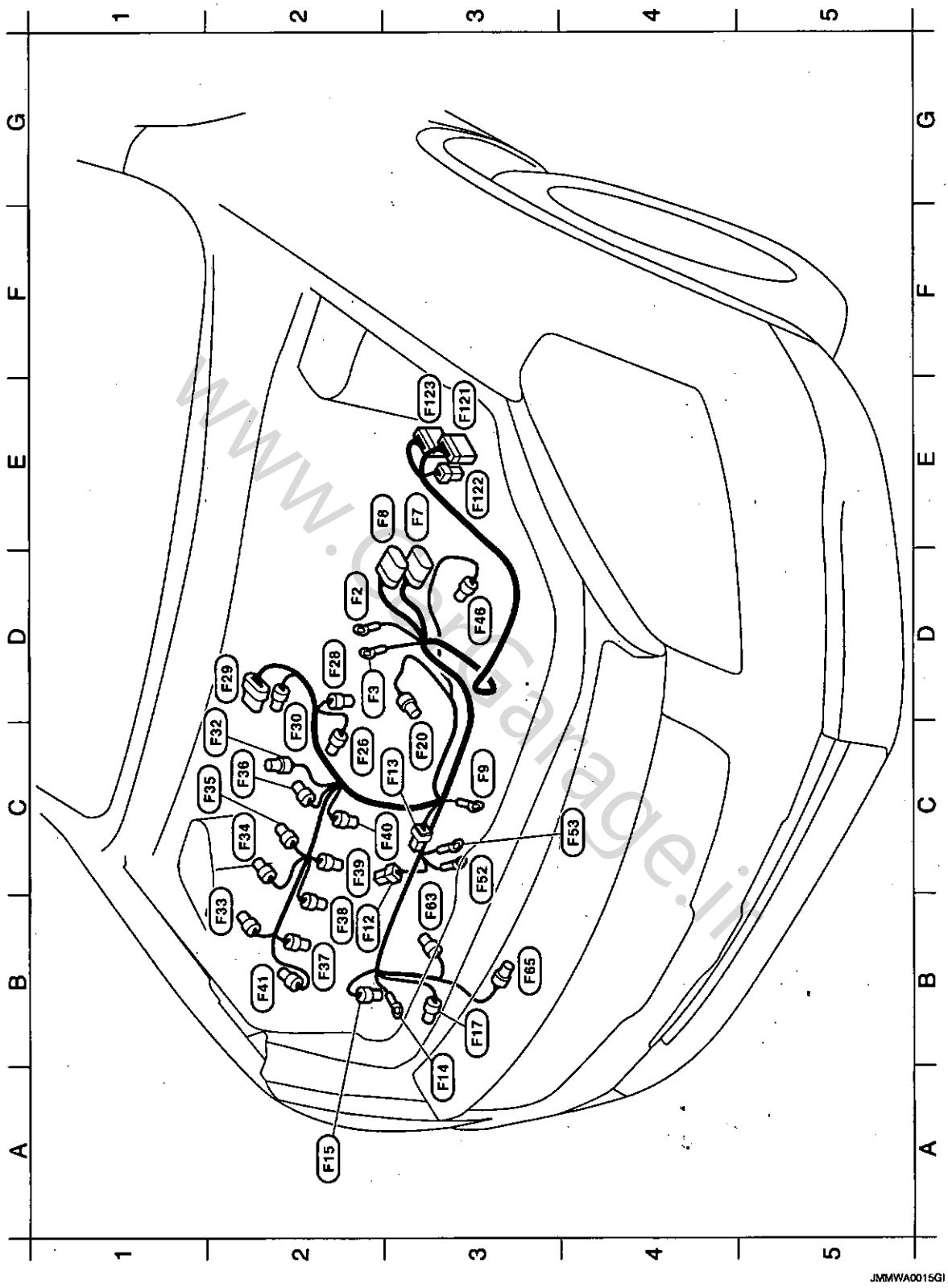

D2	F2	–	:	Fusible link holder
D2	F3	–	:	Fusible link holder
E3	F7	GR/32	:	ECM
E3	F8	BR/48	:	ECM
C3	F9	–	:	Engine ground
B2	F12	B/2	:	Knock sensor
C3	F13	W/2	:	Condenser
A3	F14	–	:	Alternator
A2	F15	B/3	:	Alternator
B3	F17	B/2	:	Compressor
C3	F20	B/3	:	Crankshaft position sensor (POS)
C2	F26	B/3	:	Camshaft position sensor (PHASE)
D2	F28	GR/2	:	Engine coolant temperature sensor
D2	F29	B/6	:	Electric throttle control actuator
C2	F30	B/4	:	Heated oxygen sensor 1
C2	F32	L/2	:	EVAP canister purge volume control solenoid valve
B2	F33	GR/3	:	Ignition coil No. 1 (With power transistor)
C2	F34	GR/3	:	Ignition coil No. 2 (With power transistor)
C2	F35	GR/3	:	Ignition coil No. 3 (With power transistor)
C2	F36	GR/3	:	Ignition coil No. 4 (With power transistor)
B2	F37	GR/2	:	Fuel injector No. 1
B2	F38	GR/2	:	Fuel injector No. 2
C2	F39	GR/2	:	Fuel injector No. 3
C2	F40	GR/2	:	Fuel injector No. 4
B2	F41	G/2	:	Intake valve timing control solenoid valve
D3	F46	G/3	:	Park/neutral position switch (With M/T Except 4WD models)
C3	F52	–	:	Starter motor
C4	F53	–	:	Starter motor
B3	F63	GR/1	:	Oil pressure switch
B3	F65	B/3	:	Oil level sensor
E3	F121	W/16	:	To E7
E3	F122	W/2	:	To E8
E3	F123	W/24	:	To E6

JMMWA0016GI

www.CarGarage.ir

MR ENGINE

HARNESS LAYOUT

www.CarGarage.ir

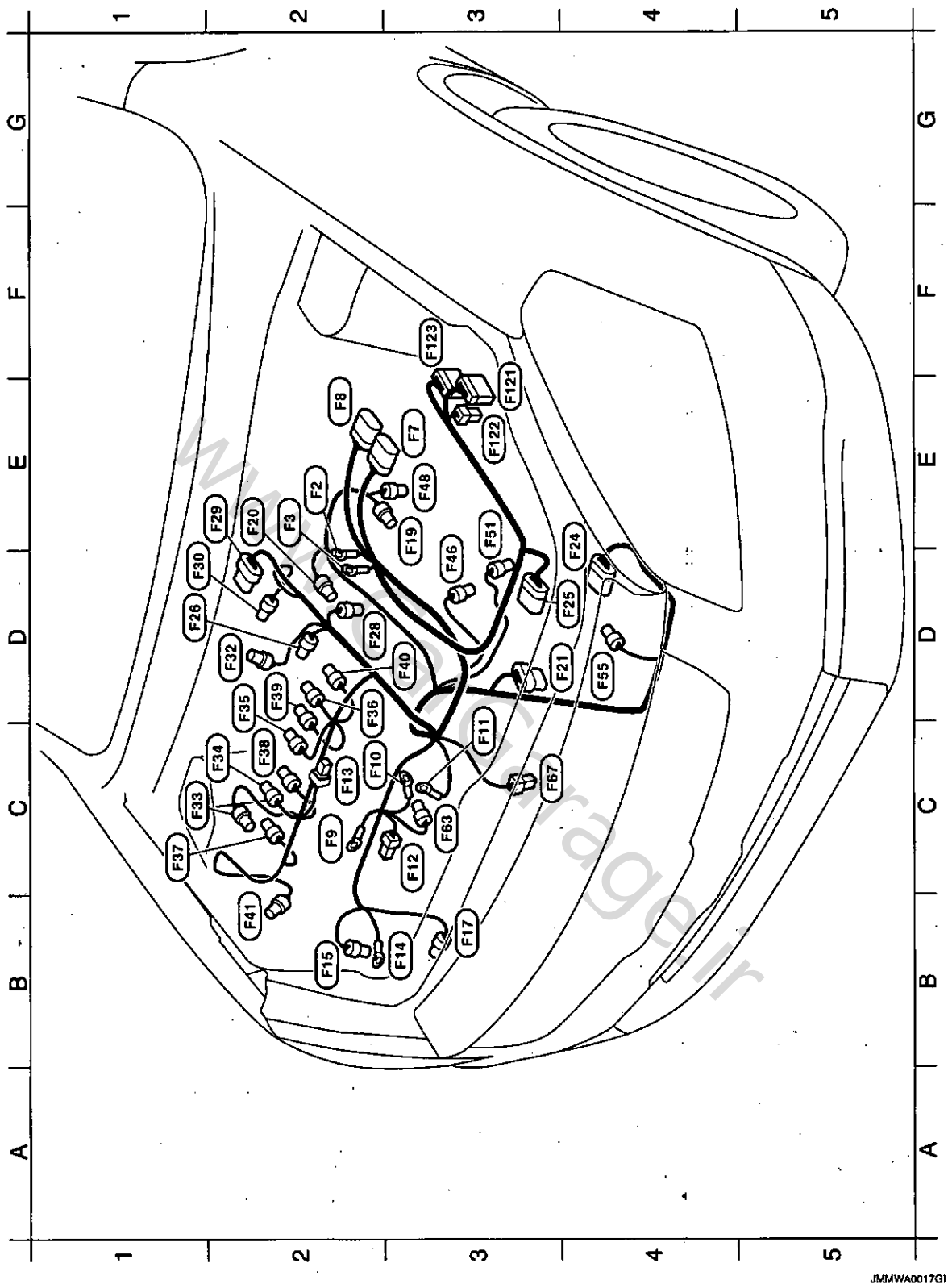

JMMWA0017GI

www.CarGarage.ir

www.CarGarage.ir

E2	F2	–	:	Fusible link holder
E2	F3	–	:	Fusible link holder
E3	F7	GR/32	:	ECM
E2	F8	BR/48	:	ECM
C2	F9	–	:	Engine ground
C2	F10	–	:	Starter motor
C3	F11	–	:	Starter motor
C3	F12	B/2	:	Knock sensor
C2	F13	W/2	:	Condenser
B3	F14	–	:	Alternator
B2	F15	B/3	:	Alternator
B3	F17	B/2	:	Compressor
E3	F19	B/3	:	Secondary speed sensor (With CVT)
E2	F20	B/3	:	Crankshaft position sensor (POS)
D3	F21	G/8	:	Park/neutral position switch (With CVT)
E4	F24	–/22	:	CVT unit (With CVT)
D4	F25	–/48	:	TCM (Transmission control module) (With CVT)
D1	F26	B/3	:	Camshaft position sensor (PHASE)
D2	F28	GR/2	:	Engine coolant temperature sensor
E2	F29	B/6	:	Electric throttle control actuator
D1	F30	B/4	:	Heated oxygen sensor 1
D2	F32	L/2	:	EVAP canister purge volume control solenoid valve
C1	F33	GR/3	:	Ignition coil No. 1 (With power transistor)
C2	F34	GR/3	:	Ignition coil No. 2 (With power transistor)
D2	F35	GR/3	:	Ignition coil No. 3 (With power transistor)
D2	F36	GR/3	:	Ignition coil No. 4 (With power transistor)
C1	F37	GR/2	:	Fuel injector No. 1
C2	F38	GR/2	:	Fuel injector No. 2
D2	F39	GR/2	:	Fuel injector No. 3
D3	F40	GR/2	:	Fuel injector No. 4
B2	F41	G/2	:	Intake valve timing control solenoid valve
D3	F46	G/3	:	Park/neutral position switch (With M/T, Except 4WD models)
E3	F48	B/2	:	Park/neutral position switch (With M/T, 4WD models)
E3	F51	B/2	:	Back-up lamp switch (With M/T, 4WD models)
D4	F55	B/3	:	Primary speed sensor (With CVT)
C3	F63	GR/1	:	Oil pressure switch
C3	F67	B/2	:	Oil level sensor
E3	F121	W/16	:	To E7
E3	F122	W/2	:	To E8
F3	F123	W/24	:	To E6

JMMWA0018GI

www.CarGarage.ir

www.CarGarage.ir

M9R ENGINE

JMMWA0139GI

www.CarGarage.ir

D3	F4	–	: Fusible link holder
D2	F5	B/1	: Fusible link holder
B3	F14	–	: Alternator
B3	F15	B/3	: Alternator
B3	F17	B/2	: Compressor
B3	F49	–	: Starter motor
B4	F50	–	: Starter motor
D4	F51	B/2	: Back-up lamp switch
E3	F54	B/3	: Turbine revolution sensor
B3	F64	B/2	: Oil pressure switch
B3	F67	B/2	: Oil level sensor
C4	F91	–/3	: Turbocharger boost sensor
B2	F95	–	: Glow plug No. 1
B2	F96	–	: Glow plug No. 2
C2	F97	–	: Glow plug No. 3
C3	F98	–	: Glow plug No. 4
C3	F99	–/6	: EGR volume control valve
E3	F108	–/8	: Glow control unit
E3	F121	W/16	: To E7
E3	F122	W/2	: To E8
F3	F123	W/24	: To E6
E2	F131	B/48	: ECM
E2	F132	BR/48	: ECM
D4	F133	B/2	: Engine coolant temperature sensor
C2	F134	–/2	: Crankshaft position sensor
D1	F137	–/2	: Turbocharger cooling pump
D2	F138	–/3	: Camshaft position sensor
C4	F139	–/3	: Fuel rail pressure sensor
D2	F140	–/2	: Fuel temperature sensor
D2	F141	B/6	: Air fuel ratio sensor
D2	F142	–/2	: Exhaust gas temperature sensor 1
D2	F143	–/2	: Fuel pump
B2	F144	–/2	: Fuel injector No. 1
C2	F145	–/2	: Fuel injector No. 2
C2	F146	–/2	: Fuel injector No. 3
C2	F147	–/2	: Fuel injector No. 4
B3	F148	–/6	: Electric throttle control actuator (Throttle position sensor/Throttle control motor)
B2	F149	–/2	: Fuel rail pressure control valve
C1	F150	–/3	: Exhaust gas pressure sensor
C3	F151	B/2	: EGR cooler bypass valve control solenoid valve

JMMWA0140GI

www.CarGarage.ir

www.CarGarage.ir

www.CarGarage.ir

LHD : Body Harness

INFOID:0000000004897462

LH SIDE

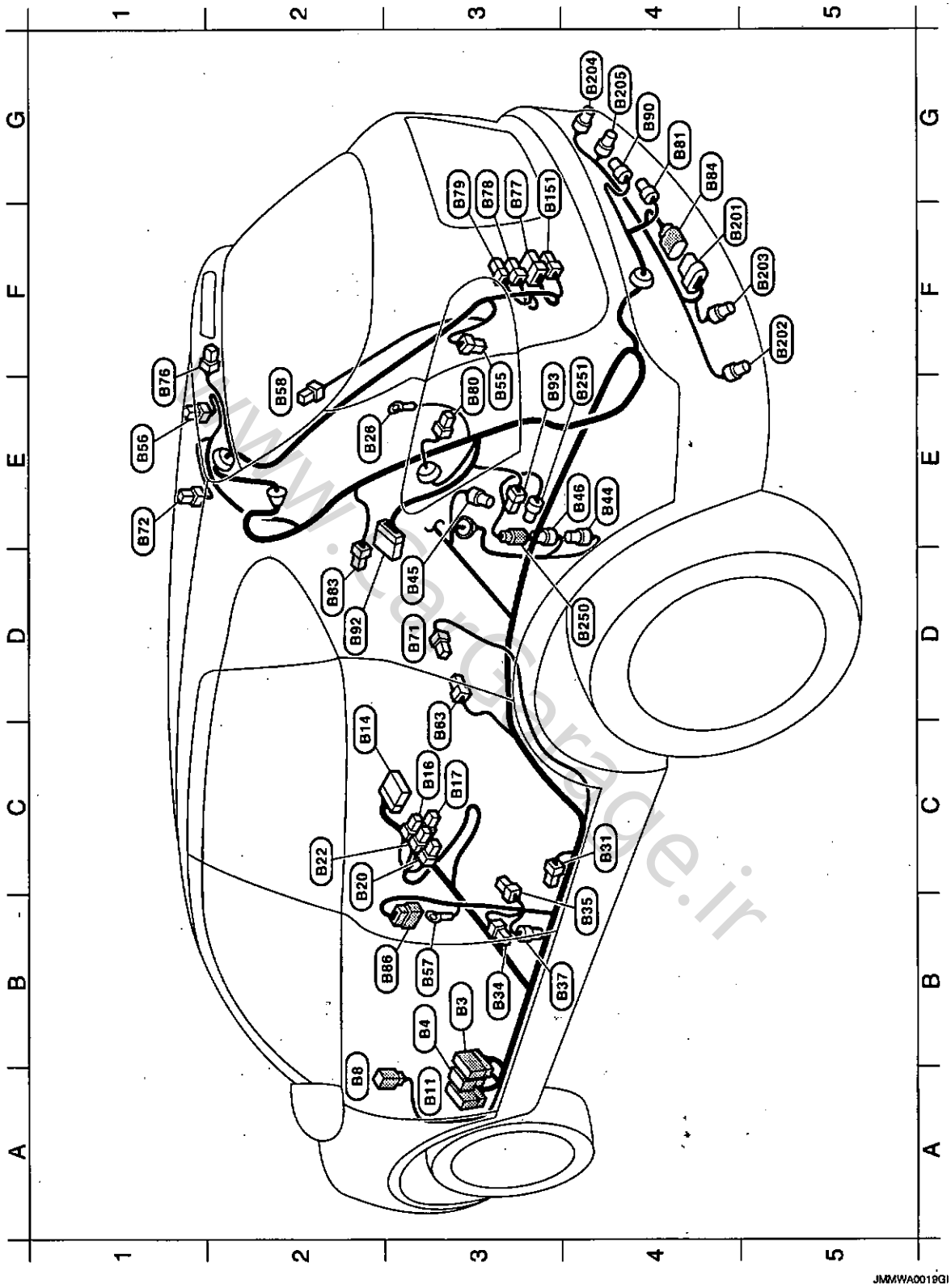

JMMWA0019GI

www.CarGarage.ir

B3	B3	W/24	:	To M13
B3	B4	W/8	:	To M14
B2	B8	W/4	:	To D8
A3	B11	W/18	:	To E101
C2	B14	Y/12	:	Air bag diagnosis sensor unit
C3	B16	Y/2	:	Front LH side air bag module
C3	B17	Y/1	:	Front LH side air bag module
C2	B20	W/3	:	Heated seat LH (With heated seat)
C2	B22	W/2	:	Front seat belt buckle switch (Driver side)
E2	B26	–	:	Body ground
C4	B31	OR/2	:	Front LH seat belt pre-tensioner-2
B3	B34	W/3	:	Front door switch (Driver side)
B4	B35	Y/2	:	Front LH seat belt pre-tensioner-1
B3	B37	Y/2	:	LH side air bag (Satellite) sensor
E4	B44	GR/2	:	Rear wheel sensor LH
D3	B45	GR/2	:	Inside key antenna (Rear seat) (With Intelligent Key system)
E4	B46	GR/2	:	To B250
E3	B55	–/2	:	Back-up lamp LH
E1	B56	–/2	:	RH side curtain air bag module
B3	B57	–	:	Body ground
E2	B58	B/1	:	Rear window defogger
D3	B63	W/4	:	Rear seat belt buckle switch LH and center
D3	B71	W/3	:	Rear door switch LH
E1	B72	–/2	:	LH side curtain air bag module
E1	B76	–/2	:	High-mounted stop lamp
G3	B77	W/8	:	To D157
G3	B78	W/4	:	To D158
G3	B79	W/2	:	To D159
E3	B80	–/4	:	Rear combination lamp LH
G4	B81	GR/2	:	Outside key antenna (Rear bumper) (With Intelligent Key system)
D2	B83	W/4	:	Luggage room lamp
G4	B84	B/6	:	To B201
B3	B88	W/8	:	To D81
G4	B90	B/2	:	Rear fog lamp
D2	B92	–/16	:	Sonar control unit (With sonar system)
E3	B93	–/2	:	Buzzer (With sonar system)
F3	B151	GR/2	:	To D201

Body sub-harness (With sonar system)

F4	B201	B/6	:	To B84
F5	B202	–/3	:	Corner sensor (Rear LH)
F5	B203	–/3	:	Center sensor (Rear LH)
G4	B204	–/3	:	Corner sensor (Rear RH)
G4	B205	–/3	:	Center sensor (Rear RH)

Body sub-harness (4WD models)

D4	B250	GR/2	:	To B46
E4	B251	GR/2	:	4WD solenoide

JMWW0020GI

www.CarGarage.ir

RH SIDE

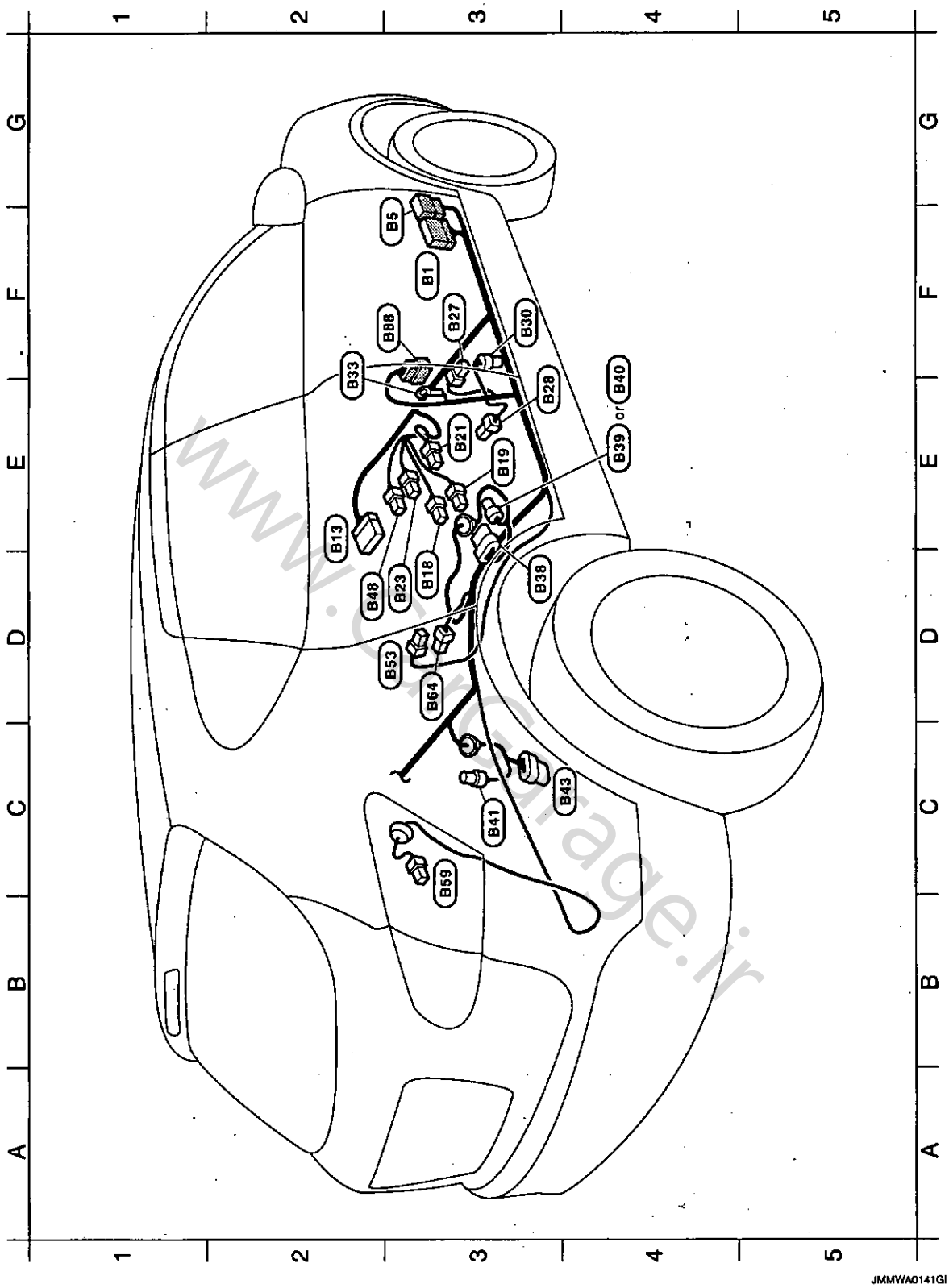

JMMWA0141GI

www.CarGarage.ir

F3	B1	W/24	:	To M11
F3	B5	W/8	:	To M15
E2	B13	Y/12	:	Air bag diagnosis sensor unit
D3	B18	Y/2	:	Front RH side air bag module
E3	B19	Y/1	:	Front RH side air bag module
E3	B21	W/3	:	Heated seat RH (With heated seat)
D3	B23	W/2	:	Front seat belt buckle switch (Passenger side)
F3	B27	W/3	:	Front door switch (Passenger side)
E3	B28	Y/2	:	Front RH seat belt pre-tensioner
F3	B30	Y/2	:	RH side air bag (Satellite) sensor
F2	B33	–	:	Body ground
D3	B38	GR/5	:	Fuel level sensor unit (With M9R engine 4WD models)
E4	B39	GR/4	:	Fuel level sensor unit (With M9R engine 2WD models)
E4	B40	GR/4	:	Fuel level sensor unit and fuel pump (With gasoline engine)
C3	B41	GR/2	:	Rear wheel sensor RH
C4	B43	–/8	:	Auto levelizer control unit (With headlamp auto aiming)
D2	B48	W/2	:	Occupant detection unit
D3	B53	W/3	:	Rear door switch RH
C3	B59	–/4	:	Rear combination lamp RH
D3	B64	W/4	:	Rear seat belt buckle switch RH and center
F3	B88	W/8	:	To D101

JMKWA0142GI

www.CarGarage.ir

www.CarGarage.ir

LHD : Room Lamp Harness

INFOID:0000000004897463

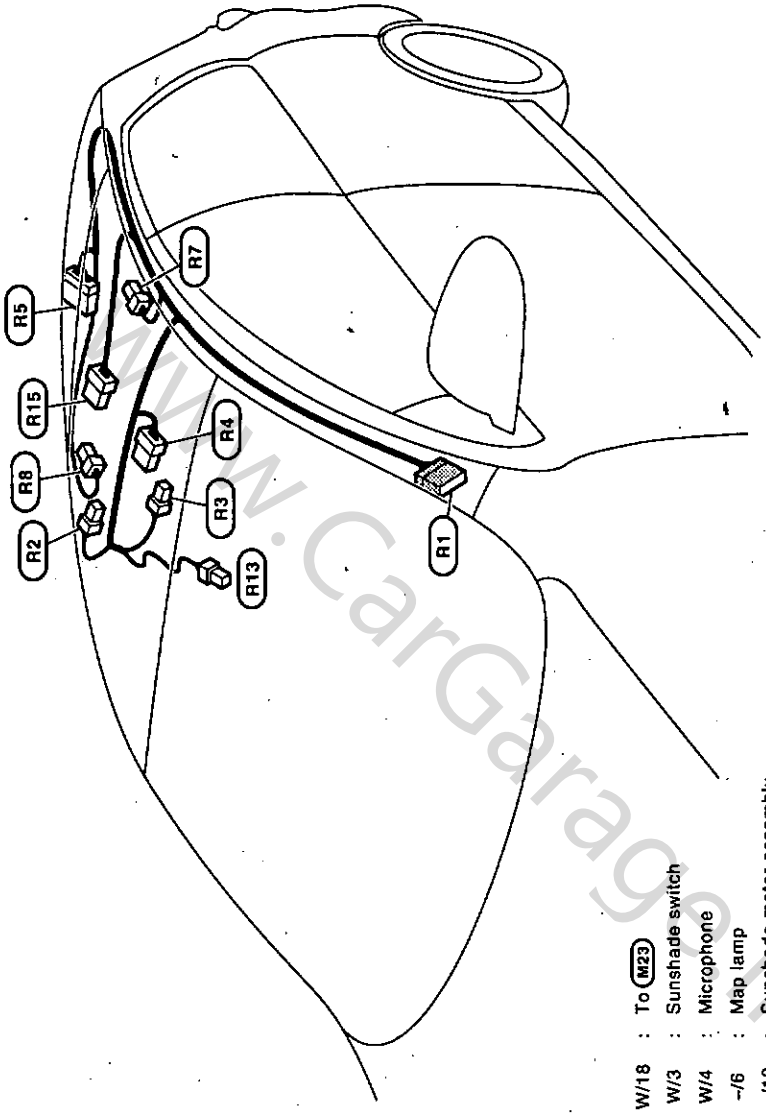

R1	W/18	:	To M23
R2	W/3	:	Sunshade switch
R3	W/4	:	Microphone
R4	–/6	:	Map lamp
R5	–/10	:	Sunshade motor assembly
R7	W/3	:	Personal lamp LH
R8	W/3	:	Personal lamp RH
R13	–/3	:	Light & Rain sensor
R15	–/6	:	Room lamp

JMMWA0145GI

www.CarGarage.ir

LHD : Front Door Harness

INFOID:0000000004897464

LH SIDE

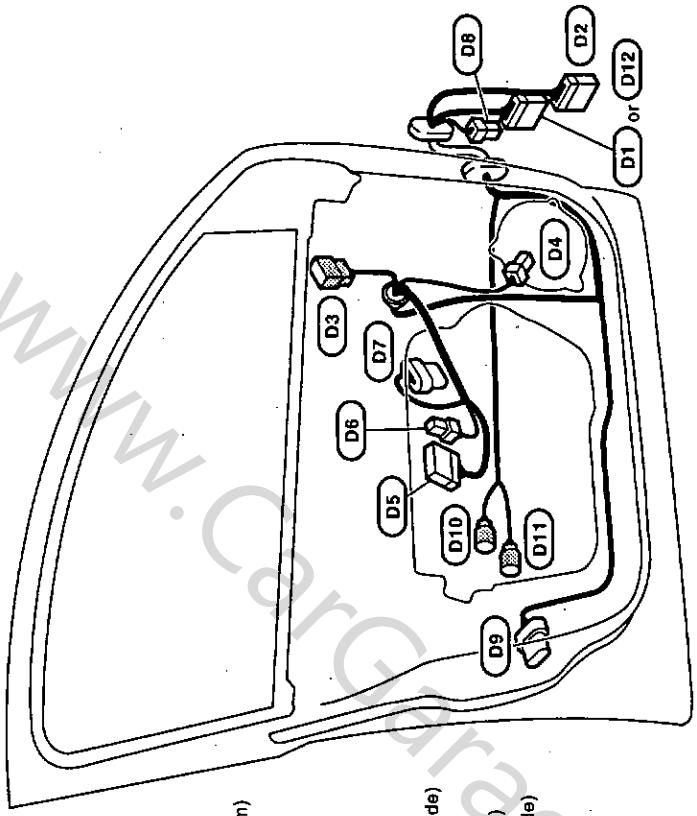

D1	W/16	:	To M18 (With Intelligent Key system)
D2	W/10	:	To M19
D3	GR/8	:	Door mirror (Driver side)
D4	W/2	:	Front door speaker LH
D5	W/16	:	Power window main switch
D6	W/3	:	Power window main switch
D7	B/6	:	Front power window motor (Driver side)
D8	W/4	:	To B8
D9	B/6	:	Front door lock actuator (Driver side)
D10	L/2	:	Front door request switch (Driver side) (With Intelligent Key system)
D11	GR/2	:	Outside key antenna (Driver side) (With Intelligent Key system)
D12	W/12	:	To M11 (Without Intelligent Key system)

JMMWA0148GI

www.CarGarage.ir

RH SIDE

D41	W/16	:	To M81 (With Intelligent Key system)
D42	W/10	:	To M82
D43	GR/8	:	Door mirror (Passenger side)
D44	W/2	:	Front door speaker RH
D45	W/8	:	Front power window switch (Passenger side)
D46	–/2	:	Front power window motor (Passenger side)
D48	B/6	:	Front door lock actuator (Passenger side)
D49	L/2	:	Front door request switch (Passenger side) (With Intelligent Key system)
D50	GR/2	:	Outside key antenna (Passenger side) (With Intelligent Key system)
D51	W/12	:	To M106 (Without Intelligent Key system)

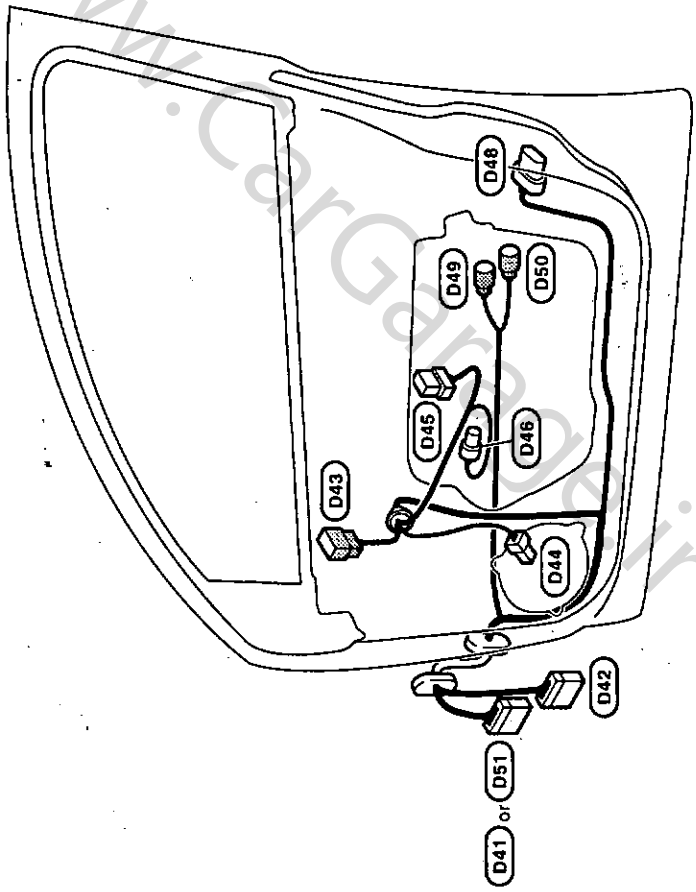

JMMWA0149GI

www.CarGarage.ir

LHD : Rear Door Harness

INFOID:0000000004897465

LH SIDE

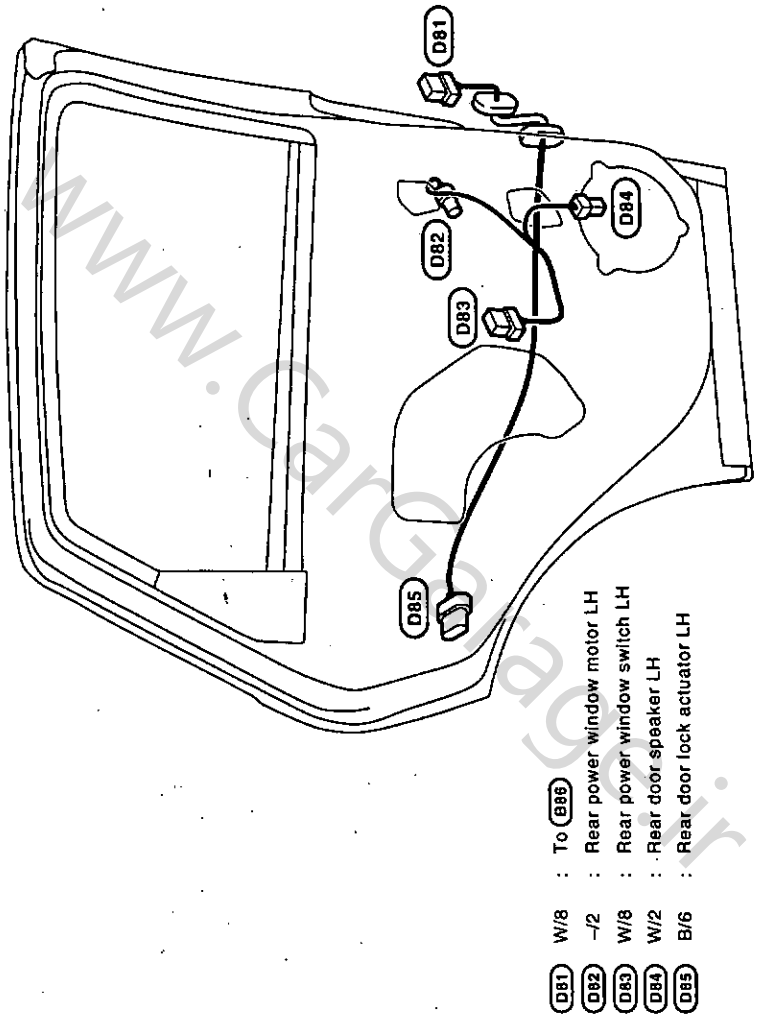

JMMWA0033GI

www.CarGarage.ir

www.CarGarage.ir

RH SIDE

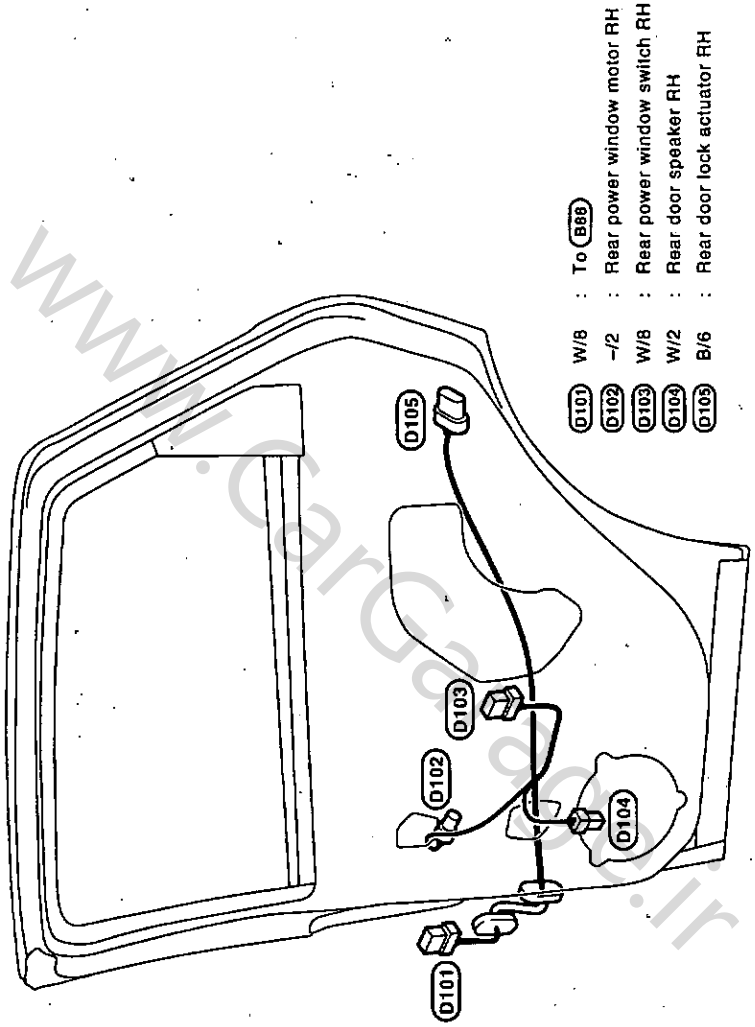

JMMWA0034GI

www.CarGarage.ir

LHD : Back Door Harness

INFOID:0000000004897466

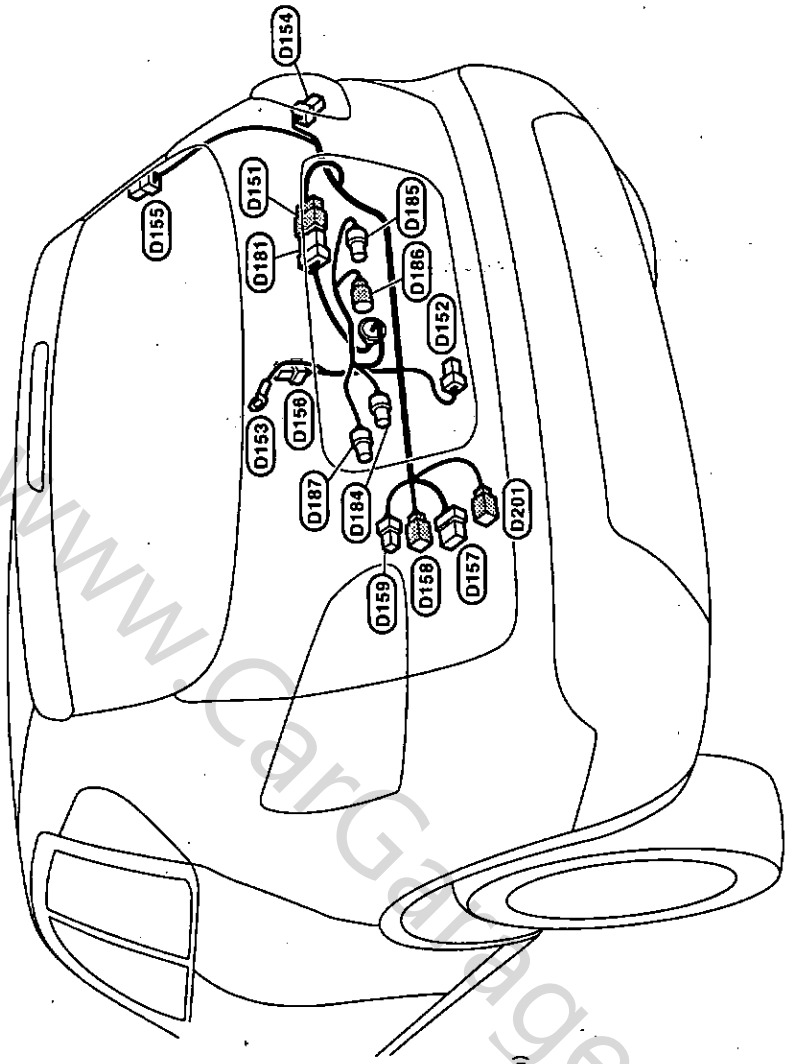

Back door harness

D151	W/8	:	To D181
D152	–/4	:	Back door lock assembly
D153	–	:	Body ground
D154	–/2	:	Back-up lamp RH
D155	B/1	:	Rear window defogger
D156	–/3	:	Rear wiper motor
D157	W/8	:	To B77
D158	W/4	:	To B78
D159	W/2	:	To B79
D201	GR/2	:	To B151

Back door No. 2 harness

D181	W/8	:	To D151
D184	–/2	:	License plate lamp LH
D185	–/2	:	License plate lamp RH
D186	GR/2	:	Back door opener switch
D187	GR/2	:	Back door request switch (With Intelligent Key system)

JMMWA0147GI

RHD

www.CarGarage.ir

www.CarGarage.ir

RHD : How To Read Harness Layout

INFOID:0000000004897467

The following Harness Layouts use a map style grid to help locate connectors on the drawings:
- Main Harness
- Engine Room Harness
- Engine Control Harness
- Body Harness
- Room Lamp Harness
- Door Harness

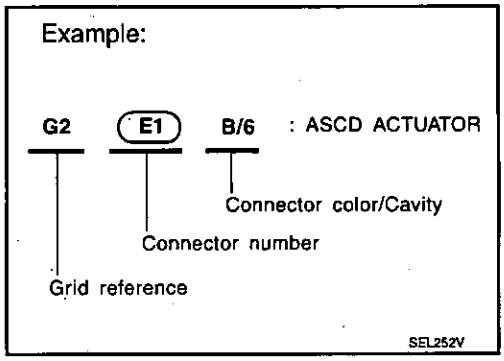

To use the grid reference

1. Find the desired connector number on the connector list.
2. Find the grid reference.
3. On the drawing, find the crossing of the grid reference letter column and number row.
4. Find the connector number in the crossing zone.
5. Follow the line (if used) to the connector.

CONNECTOR SYMBOL

Main symbols of connector (in Harness Layout) are indicated below.

Connector type	Water proof type		Standard type	
	Male	Female	Male	Female
• Cavity: Less than 4 • Relay connector				
• Cavity: From 5 to 8				
• Cavity: More than 9				
• Ground terminal etc.	—			

www.CarGarage.ir

www.CarGarage.ir

RHD : Outline

INFOID:0000000004897468

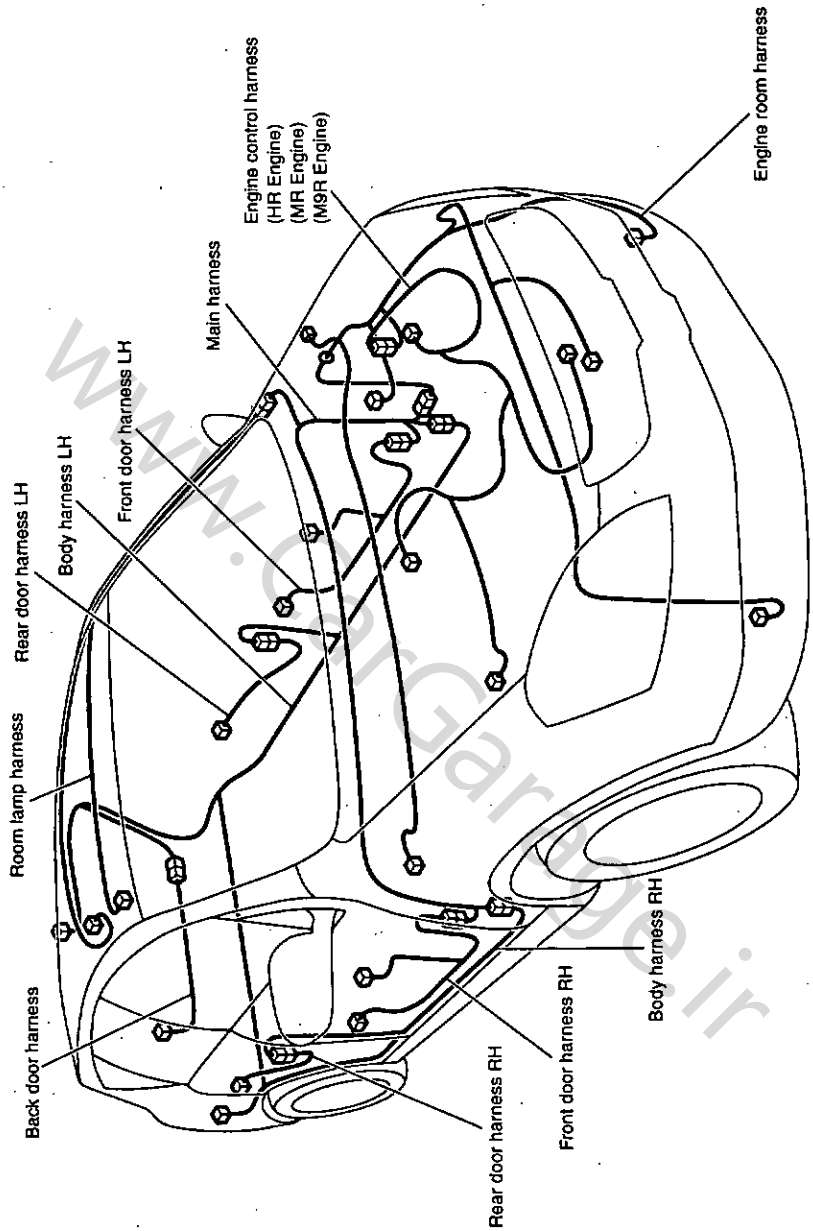

JMMWA0128G1

www.CarGarage.ir

RHD : Main Harness

INFOID:0000000004897469

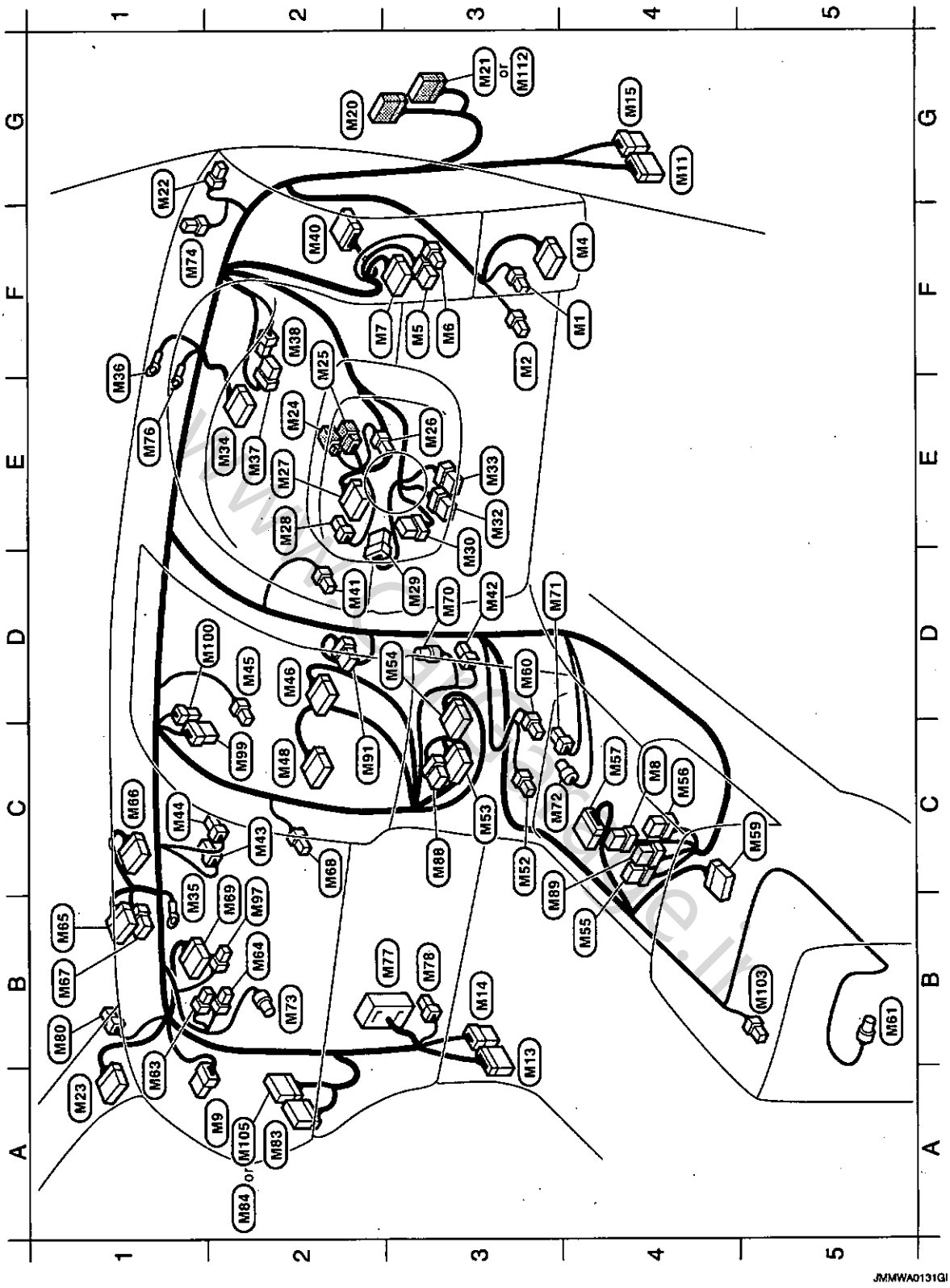

JMMWA0131GI

www.CarGarage.ir

F4	M1	–/1	:	Fuse block (J/B)
F3	M2	–/1	:	Fuse block (J/B)
F4	M4	B/16	:	Data link connector
F3	M5	GR/6	:	VDC off switch (With VDC)
F3	M6	W/4	:	Headlamp aiming switch (With headlamp Manual aiming)
F2	M7	W/10	:	Door mirror remote control switch
C4	M8	W/8	:	4WD mode switch (4WD models)
A2	M9	–/6	:	Air bag cutoff switch
G4	M11	W/24	:	To B1
B3	M13	W/24	:	To B3
B3	M14	W/8	:	To B4
G4	M15	W/8	:	To B5
G2	M20	W/16	:	To D21
G3	M21	W/10	:	To D22
G1	M22	–/2	:	Tweeter RH
A1	M23	W/18	:	To R1
E2	M24	W/2	:	Key switch (Without Intelligent Key system)
F2	M25	GR/6	:	Ignition knob switch, key switch and key lock solenoid (With Intelligent Key system)
E3	M26	W/4	:	NATS antenna amp.
E2	M27	W/16	:	Combination switch
E2	M28	W/4	:	Steering lock unit (With Intelligent Key system)
D3	M29	W/6	:	Ignition switch
E3	M30	W/8	:	Steering angle sensor (With VDC)
E3	M32	Y/6	:	Combination switch (Spiral cable)
E3	M33	GR/8	:	Combination switch (Spiral cable)
E2	M34	W/40	:	Combination meter
C1	M35	–	:	Body ground
F1	M36	–	:	Body ground
E2	M37	–/8	:	EPS control unit
F2	M38	–/2	:	EPS control unit
F2	M40	W/40	:	Intelligent Key unit (With Intelligent Key system)
D2	M41	W/2	:	In-vehicle sensor (With auto A/C)
D3	M42	W/2	:	Intake sensor (With auto A/C)
C2	M43	B/2	:	High-level ventilator door motor (Without auto A/C)
C1	M44	W/3	:	High-level ventilator door motor (With auto A/C)
D2	M45	W/4	:	Hazard switch
D2	M46	W/20	:	Audio unit
C2	M48	W/12	:	Audio unit
C3	M52	–/4	:	High-level ventilator switch
C3	M53	W/40	:	Auto AMP. (With auto A/C)
D3	M54	GR/20	:	Heater control panel (Without auto A/C)
B4	M55	BR/6	:	Heated seat switch LH (With heated seat)
C4	M56	B/6	:	Heated seat switch RH (With heated seat)
C4	M57	W/16	:	Control device (With CVT)
C5	M59	Y/28	:	Air bag diagnosis sensor unit
D3	M60	B/2	:	Power socket
B5	M61	GR/2	:	Inside key antenna (Console) (With Intelligent Key system)
A1	M63	–/2	:	Front passenger air bag module
B2	M64	–/1	:	Front passenger air bag module
B1	M65	B/40	:	BCM (Body control module)
C1	M66	–/12	:	BCM (Body control module)
B1	M67	–/8	:	BCM (Body control module)
C2	M68	B/2	:	Intake door motor (Without auto A/C)
B2	M69	W/16	:	4WD control unit (4WD models)
D3	M70	GR/2	:	Inside key antenna (Instrument center) (With Intelligent Key system)
D3	M71	BR/3	:	G sensor (4WD models)
C3	M72	B/4	:	YAW rate sensor (With VDC)
B2	M73	–/2	:	Glove box lamp
F1	M74	B/2	:	Sunload sensor (With auto A/C)
E1	M76	–	:	Body ground
B3	M77	SMJ	:	To E105
B3	M78	B/2	:	To E106
B1	M80	–/2	:	Tweeter LH
A2	M83	W/16	:	To D61
A2	M84	W/10	:	To D62
C3	M88	–/8	:	Fan switch (Without auto A/C)
C3	M89	–/6	:	Door lock and unlock switch
C2	M91	W/8	:	Indicator unit
B2	M97	Y/2	:	To M202
C2	M99	W/6	:	To M301
D2	M100	W/3	:	To M302
B5	M103	B/1	:	Parking brake switch
A2	M105	W/12	:	To D71 (Without Intelligent Key system)
G3	M112	W/12	:	To D32 (Without Intelligent Key system)

JMMWA0132GI

www.CarGarage.ir

RHD : Engine Room Harness

INFOID:0000000004897470

ENGINE COMPARTMENT

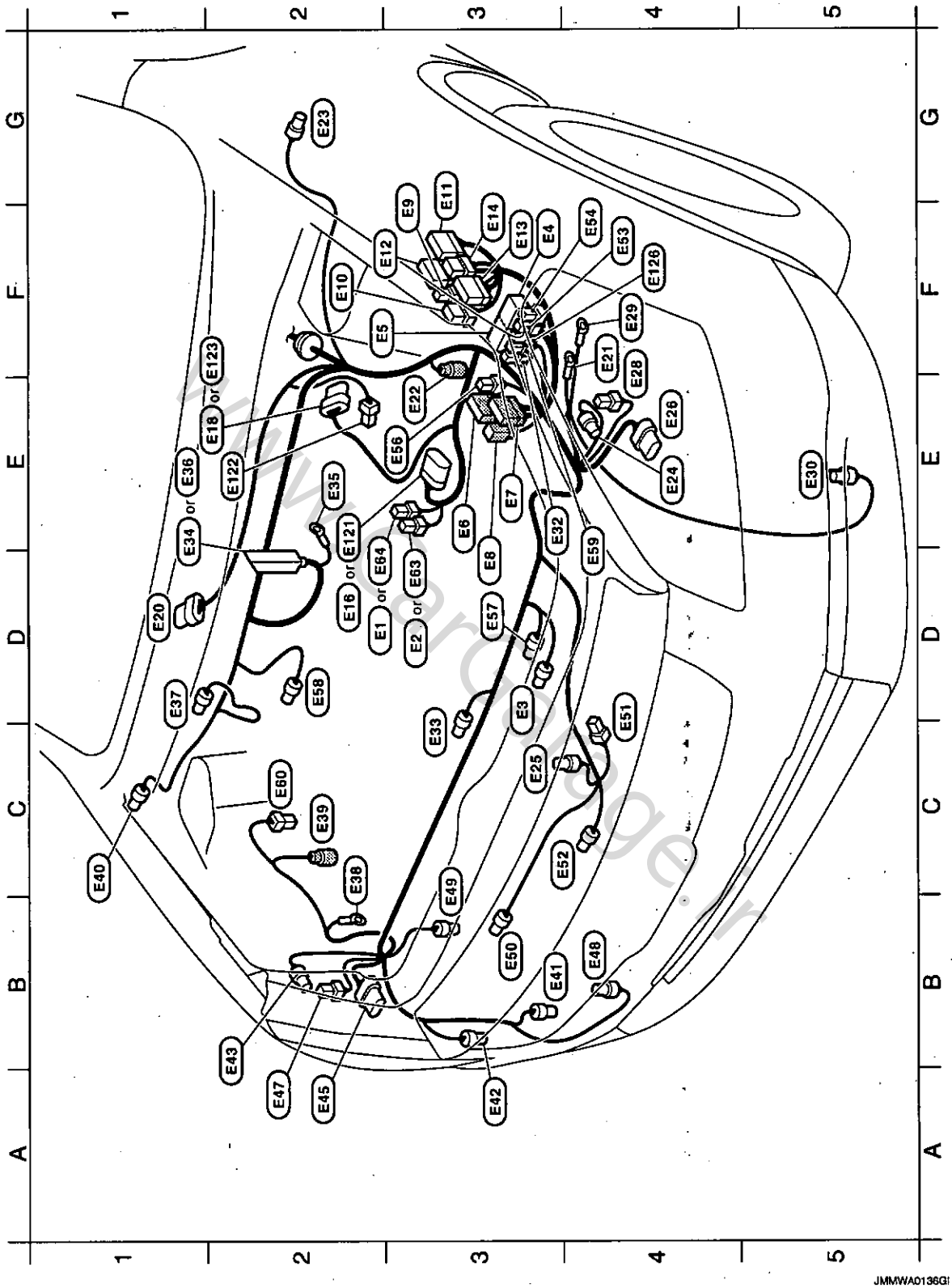

JMMWA0136GI

www.CarGarage.ir

D2	E1	GR/2	:	Fusible link holder (With gasoline engine)
D3	E2	BR/2	:	Fusible link holder (With gasoline engine)
D3	E3	–/2	:	Cooling fan motor
F3	E4	–	:	Fuse and fusible link block
F3	E5	–/3	:	Horn relay
E3	E6	W/24	:	To F123
E3	E7	W/16	:	To F121
D3	E8	W/2	:	To F122
F3	E9	B/2	:	IPDM E/R (Intelligent power distribution module engine room)
F2	E10	B/6	:	IPDM E/R (Intelligent power distribution module engine room)
G3	E11	BR/12	:	IPDM E/R (Intelligent power distribution module engine room)
F3	E12	W/12	:	IPDM E/R (Intelligent power distribution module engine room)
F3	E13	W/16	:	IPDM E/R (Intelligent power distribution module engine room)
F3	E14	–/6	:	IPDM E/R (Intelligent power distribution module engine room)
D2	E16	B/32	:	ECM (With gasoline engine)
E2	E18	B/6	:	Mass air flow sensor (With gasoline engine)
D1	E20	–/5	:	Front wiper motor
F4	E21	–	:	Body ground
E3	E22	GR/2	:	Front wheel sensor LH
G2	E23	–/2	:	Side turn signal lamp LH
E4	E24	B/2	:	Parking lamp LH
C3	E25	BR/3	:	Intelligent Key warning buzzer (With Intelligent Key system)
E4	E26	–/5	:	Front combination lamp LH
F4	E28	–/3	:	Headlamp aiming motor LH
F4	E29	–	:	Body ground
E5	E30	–/2	:	Front fog lamp LH
E3	E32	L/4	:	Headlamp washer relay
C3	E33	Y/2	:	Crash zone sensor
E1	E34	–/26	:	ABS actuator and electric unit (Control unit) (Without VDC)
E2	E35	–	:	Body ground
E1	E36	–/26	:	ABS actuator and electric unit (Control unit) (With VDC)
D1	E37	GR/2	:	Brake fluid level switch
C2	E38	–	:	Body ground
C2	E39	GR/2	:	Front wheel sensor RH
C1	E40	–/2	:	Side turn signal lamp RH
B3	E41	B/2	:	Washer pump
A3	E42	–/2	:	Headlamp washer pump
B2	E43	B/2	:	Parking lamp RH
A2	E45	–/5	:	Front combination lamp RH
A2	E47	–/3	:	Headlamp aiming motor RH
B4	E48	–/2	:	Front fog lamp RH
C3	E49	B/3	:	Refrigerant pressure sensor (With gasoline engine)
B3	E50	–/3	:	Refrigerant pressure sensor (With M9R engine)
D4	E51	–/2	:	Horn
C4	E52	B/4	:	OAT sensor
F4	E53	–/4	:	PTC relay-1 (With M9R engine)
F4	E54	–/4	:	PTC relay-2 (With M9R engine)
E3	E56	L/4	:	Turbocharger cooling pump relay (With M9R engine)
D3	E57	–/3	:	Resistor
D2	E58	B/4	:	Heated oxygen sensor 2
E4	E59	–/4	:	Cooling fan relay-3
C2	E60	B/3	:	Water in fuel sensor (With M9R engine)
D3	E63	BR/2	:	Fusible link holder (With M9R engine)
D2	E64	GR/2	:	Fusible link holder (With M9R engine)
E2	E121	B/32	:	ECM (With M9R engine)
E2	E122	B/2	:	Turbocharger boost control solenoid valve (With M9R engine)
F2	E123	–/5	:	Mass air flow meter (With M9R engine)
F4	E126	–/4	:	PTC relay-3 (With M9R engine)

JMWWA0137GI

www.CarGarage.ir

PASSENGER COMPARTMENT

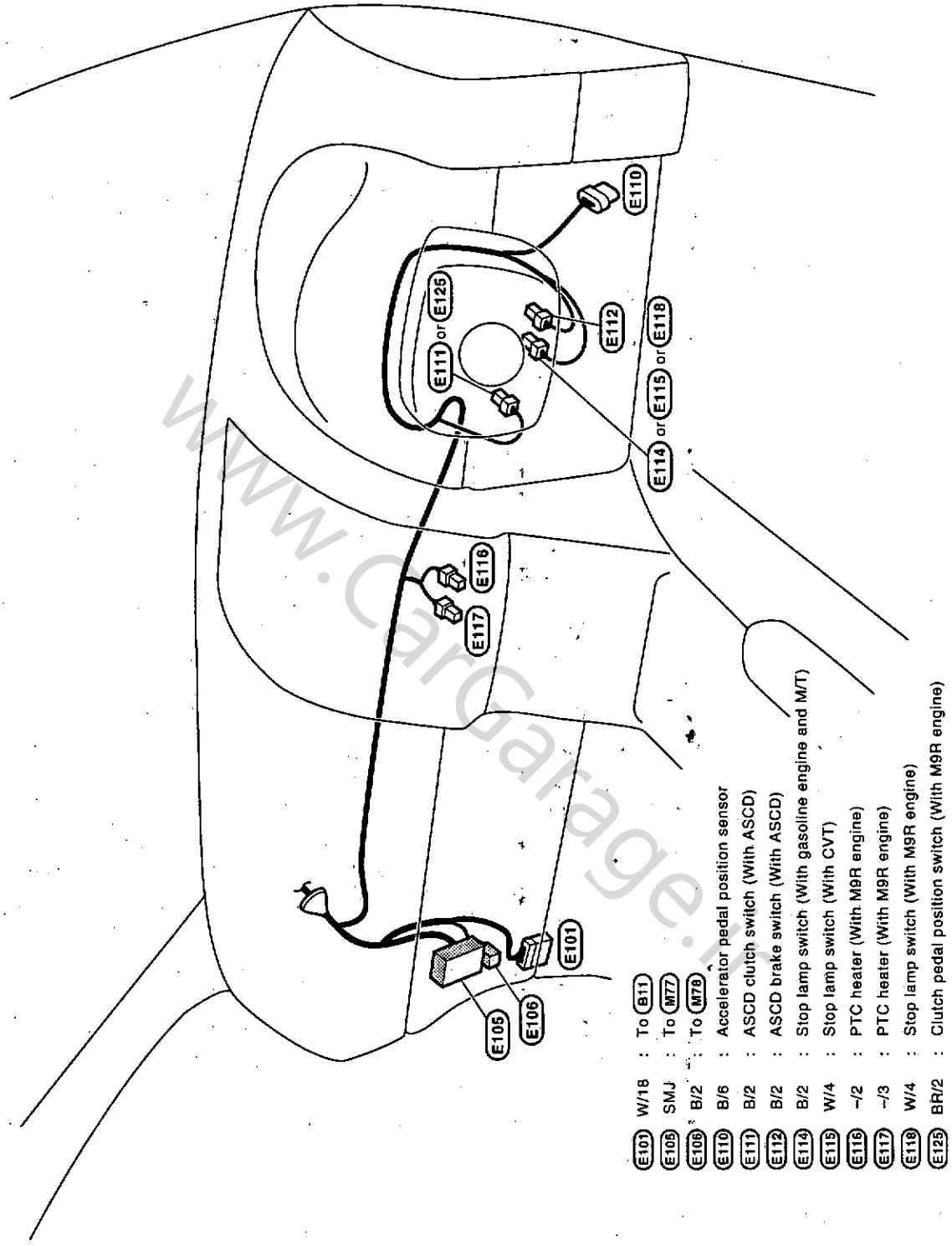

www.CarGarage.ir

RHD : Engine Control Harness

INFOID:0000000004897471

HR ENGINE

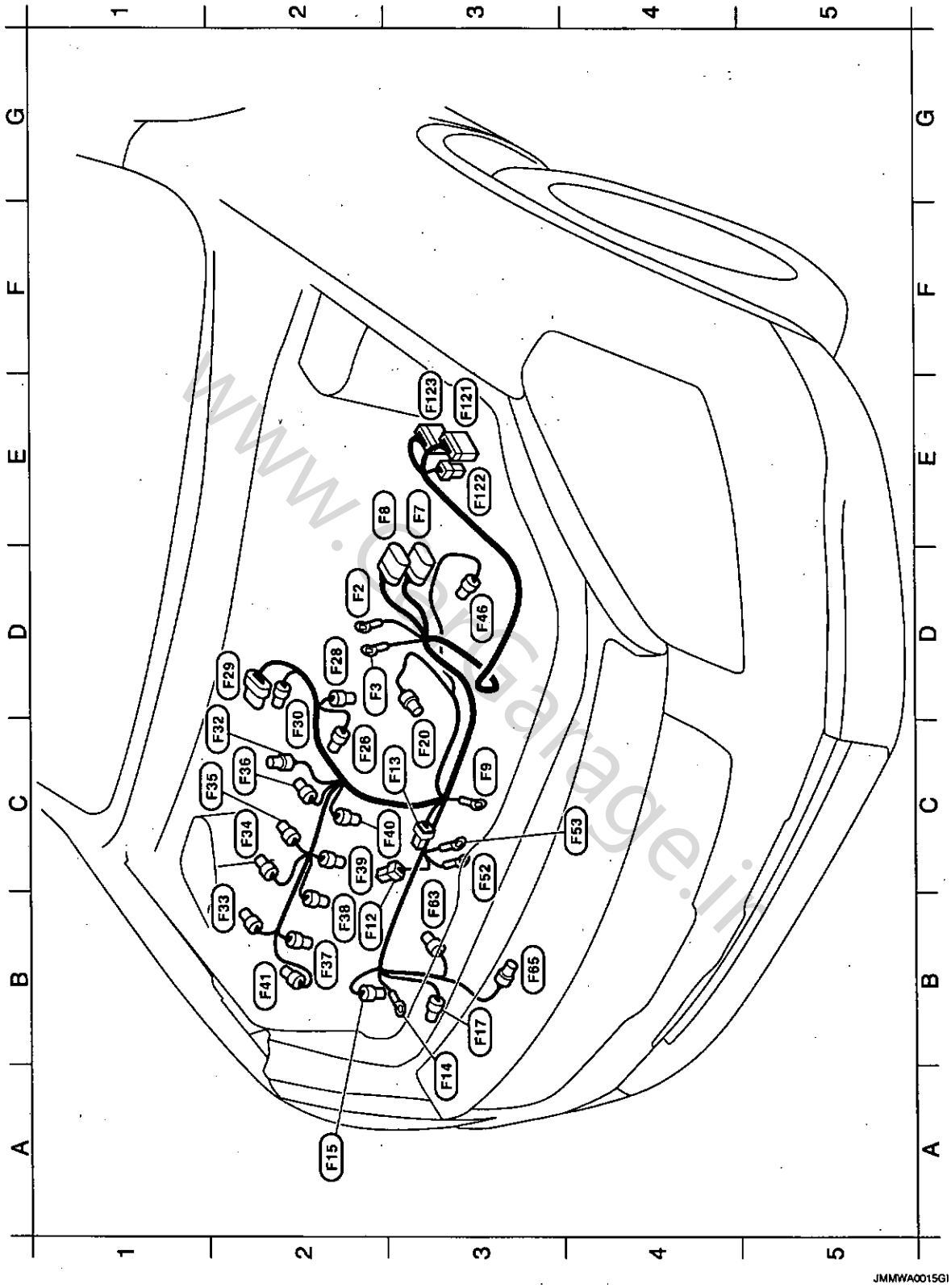

JMMWA0015GI

www.CarGarage.ir

D2	F2	–	:	Fusible link holder
D2	F3	–	:	Fusible link holder
E3	F7	GR/32	:	ECM
E3	F8	BR/48	:	ECM
C3	F9	–	:	Engine ground
B2	F12	B/2	:	Knock sensor
C3	F13	W/2	:	Condenser
A3	F14	–	:	Alternator
A2	F15	B/3	:	Alternator
B3	F17	B/2	:	Compressor
C3	F20	B/3	:	Crankshaft position sensor (POS)
C2	F26	B/3	:	Camshaft position sensor (PHASE)
D2	F28	GR/2	:	Engine coolant temperature sensor
D2	F29	B/6	:	Electric throttle control actuator
C2	F30	B/4	:	Heated oxygen sensor 1
C2	F32	L/2	:	EVAP canister purge volume control solenoid valve
B2	F33	GR/3	:	Ignition coil No. 1 (With power transistor)
C2	F34	GR/3	:	Ignition coil No. 2 (With power transistor)
C2	F35	GR/3	:	Ignition coil No. 3 (With power transistor)
C2	F36	GR/3	:	Ignition coil No. 4 (With power transistor)
B2	F37	GR/2	:	Fuel injector No. 1
B2	F38	GR/2	:	Fuel injector No. 2
C2	F39	GR/2	:	Fuel injector No. 3
C2	F40	GR/2	:	Fuel injector No. 4
B2	F41	G/2	:	Intake valve timing control solenoid valve
D3	F46	G/3	:	Park/neutral position switch (With M/T Except 4WD models)
C3	F52	–	:	Starter motor
C4	F53	–	:	Starter motor
B3	F63	GR/1	:	Oil pressure switch
B3	F65	B/3	:	Oil level sensor
E3	F121	W/16	:	To E7
E3	F122	W/2	:	To E8
E3	F123	W/24	:	To E6

JMMWA0016GI

www.CarGarage.ir

www.CarGarage.ir

JMMWA0017GI

www.CarGarage.ir

E2	F2	–	:	Fusible link holder
E2	F3	–	:	Fusible link holder
E3	F7	GR/32	:	ECM
E2	F8	BR/48	:	ECM
C2	F9	–	:	Engine ground
C2	F10	–	:	Starter motor
C3	F11	–	:	Starter motor
C3	F12	B/2	:	Knock sensor
C2	F13	W/2	:	Condenser
B3	F14	–	:	Alternator
B2	F15	B/3	:	Alternator
B3	F17	B/2	:	Compressor
E3	F19	B/3	:	Secondary speed sensor (With CVT)
E2	F20	B/3	:	Crankshaft position sensor (POS)
D3	F21	G/8	:	Park/neutral position switch (With CVT)
E4	F24	–/22	:	CVT unit (With CVT)
D4	F25	–/48	:	TCM (Transmission control module) (With CVT)
D1	F26	B/3	:	Camshaft position sensor (PHASE)
D2	F28	GR/2	:	Engine coolant temperature sensor
E2	F29	B/6	:	Electric throttle control actuator
D1	F30	B/4	:	Heated oxygen sensor 1
D2	F32	L/2	:	EVAP canister purge volume control solenoid valve
C1	F33	GR/3	:	Ignition coil No. 1 (With power transistor)
C2	F34	GR/3	:	Ignition coil No. 2 (With power transistor)
D2	F35	GR/3	:	Ignition coil No. 3 (With power transistor)
D2	F36	GR/3	:	Ignition coil No. 4 (With power transistor)
C1	F37	GR/2	:	Fuel injector No. 1
C2	F38	GR/2	:	Fuel injector No. 2
D2	F39	GR/2	:	Fuel injector No. 3
D3	F40	GR/2	:	Fuel injector No. 4
B2	F41	G/2	:	Intake valve timing control solenoid valve
D3	F46	G/3	:	Park/neutral position switch (With M/T, Except 4WD models)
E3	F48	B/2	:	Park/neutral position switch (With M/T, 4WD models)
E3	F51	B/2	:	Back-up lamp switch (With M/T, 4WD models)
D4	F55	B/3	:	Primary speed sensor (With CVT)
C3	F63	GR/1	:	Oil pressure switch
C3	F67	B/2	:	Oil level sensor
E3	F121	W/16	:	To E7
E3	F122	W/2	:	To E8
F3	F123	W/24	:	To E6

JMWA0018GI

www.CarGarage.ir

www.CarGarage.ir

HARNESS LAYOUT

JMMWA0139GI

www.CarGarage.ir

D3	F4	–	:	Fusible link holder
D2	F5	B/1	:	Fusible link holder
B3	F14	–	:	Alternator
B3	F15	B/3	:	Alternator
B3	F17	B/2	:	Compressor
B3	F49	–	:	Starter motor
B4	F50	–	:	Starter motor
D4	F51	B/2	:	Back-up lamp switch
E3	F54	B/3	:	Turbine revolution sensor
B3	F64	B/2	:	Oil pressure switch
B3	F67	B/2	:	Oil level sensor
C4	F91	–/3	:	Turbocharger boost sensor
B2	F95	–	:	Glow plug No. 1
B2	F96	–	:	Glow plug No. 2
C2	F97	–	:	Glow plug No. 3
C3	F98	–	:	Glow plug No. 4
C3	F99	–/6	:	EGR volume control valve
E3	F108	–/8	:	Glow control unit
E3	F121	W/16	:	To E7
E3	F122	W/2	:	To E8
F3	F123	W/24	:	To E6
E2	F131	B/48	:	ECM
E2	F132	BR/48	:	ECM
D4	F133	B/2	:	Engine coolant temperature sensor
C2	F134	–/2	:	Crankshaft position sensor
D1	F137	–/2	:	Turbocharger cooling pump
D2	F138	–/3	:	Camshaft position sensor
C4	F139	–/3	:	Fuel rail pressure sensor
D2	F140	–/2	:	Fuel temperature sensor
D2	F141	B/6	:	Air fuel ratio sensor
D2	F142	–/2	:	Exhaust gas temperature sensor 1
D2	F143	–/2	:	Fuel pump
B2	F144	–/2	:	Fuel injector No. 1
C2	F145	–/2	:	Fuel injector No. 2
C2	F146	–/2	:	Fuel injector No. 3
C2	F147	–/2	:	Fuel injector No. 4
B3	F148	–/6	:	Electric throttle control actuator (Throttle position sensor/Throttle control motor)
B2	F149	–/2	:	Fuel rail pressure control valve
C1	F150	–/3	:	Exhaust gas pressure sensor
C3	F151	B/2	:	EGR cooler bypass valve control solenoid valve

JMWWA0140GI

www.CarGarage.ir

RHD : Body Harness

INFOID:0000000004897472

LH SIDE

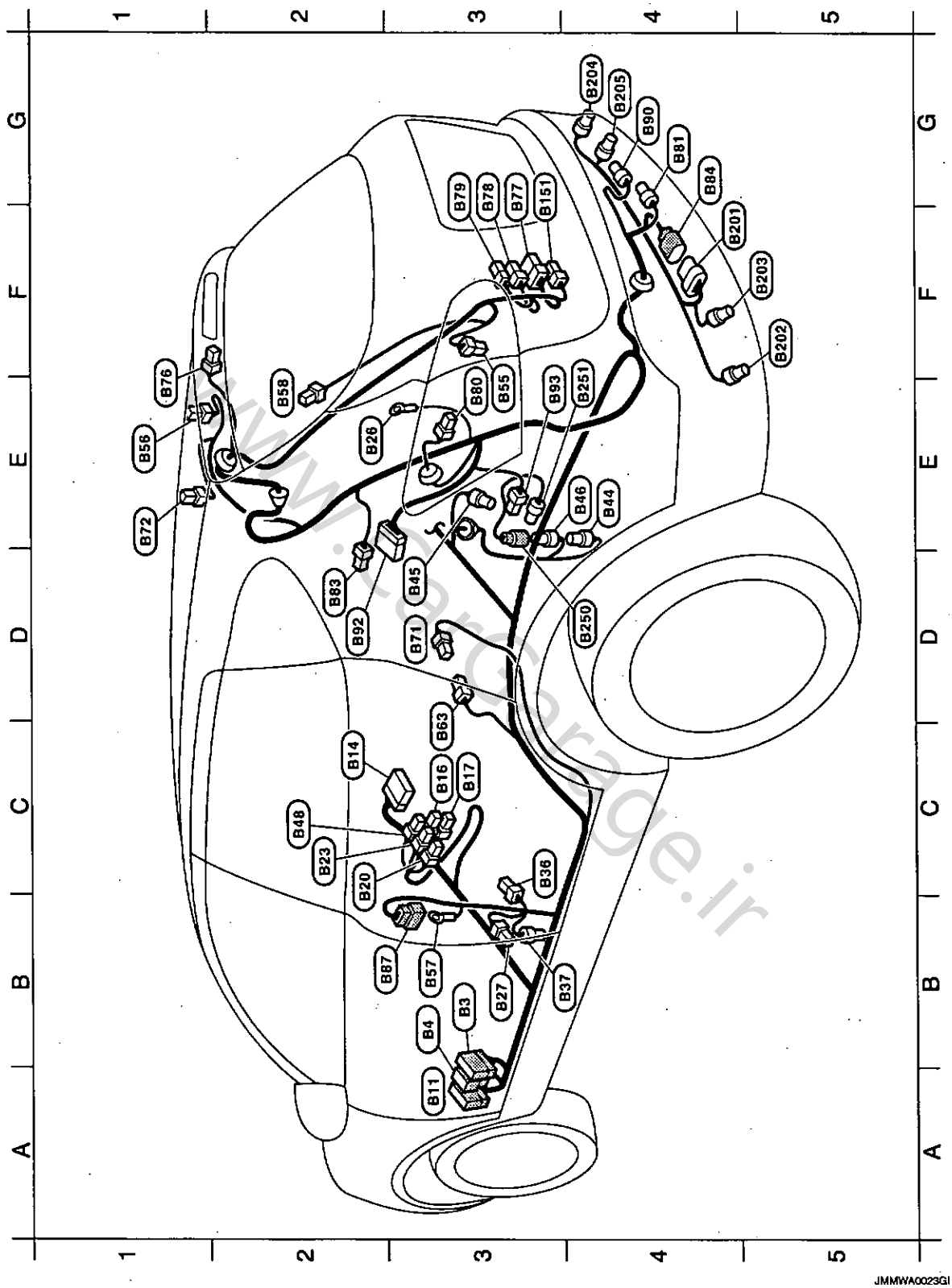

www.CarGarage.ir

B3	B3	W/24	:	To M13
B3	B4	W/8	:	To M14
A3	B11	W/18	:	To E101
C2	B14	Y/12	:	Air bag diagnosis sensor unit
C3	B16	Y/2	:	Front LH side air bag module
C3	B17	Y/1	:	Front LH side air bag module
C2	B20	W/3	:	Heated seat LH (With heated seat)
C2	B23	W/2	:	Front seat belt buckle switch (Passenger side)
E2	B26	–	:	Body ground
B3	B27	W/3	:	Front door switch (Passenger side)
C3	B36	Y/2	:	Front LH seat belt pre-tensioner
B3	B37	Y/2	:	LH side air bag (Satellite) sensor
E4	B44	GR/2	:	Rear wheel sensor LH
D3	B45	GR/2	:	Inside key antenna (Rear seat) (With Intelligent Key system)
E4	B46	GR/2	:	To B250
C2	B48	W/2	:	Occupant detection unit
E3	B55	–/2	:	Back-up lamp LH
E1	B56	–/2	:	RH side curtain air bag module
B3	B57	–	:	Body ground
E2	B58	B/1	:	Rear window defogger
C3	B63	W/4	:	Rear seat belt buckle switch LH and center
D3	B71	W/3	:	Rear door switch LH
E1	B72	–/2	:	LH side curtain air bag module
E1	B76	–/2	:	High-mounted stop lamp
G3	B77	W/8	:	To D157
G3	B78	W/4	:	To D158
G3	B79	W/2	:	To D159
E3	B80	–/4	:	Rear combination lamp LH
G4	B81	GR/2	:	Outside key antenna (Rear bumper) (With Intelligent Key system)
D2	B83	W/4	:	Luggage room lamp
G4	B84	B/6	:	To B201
B3	B87	W/8	:	To D111
G4	B90	B/2	:	Rear fog lamp
D2	B92	–/16	:	Sonar control unit (With sonar system)
E3	B93	–/2	:	Buzzer (With sonar system)
F3	B151	GR/2	:	To D201

Body sub-harness (With sonar system)

F4	B201	B/6	:	To B84
F5	B202	–/3	:	Corner sensor (Rear LH)
F5	B203	–/3	:	Center sensor (Rear LH)
G4	B204	–/3	:	Corner sensor (Rear RH)
G4	B205	–/3	:	Center sensor (Rear RH)

Body sub-harness (4WD models)

D4	B250	GR/2	:	To B46
E4	B251	GR/2	:	4WD solenoide

JMMWA0024GI

www.CarGarage.ir

www.CarGarage.ir

HARNESS LAYOUT

RH SIDE

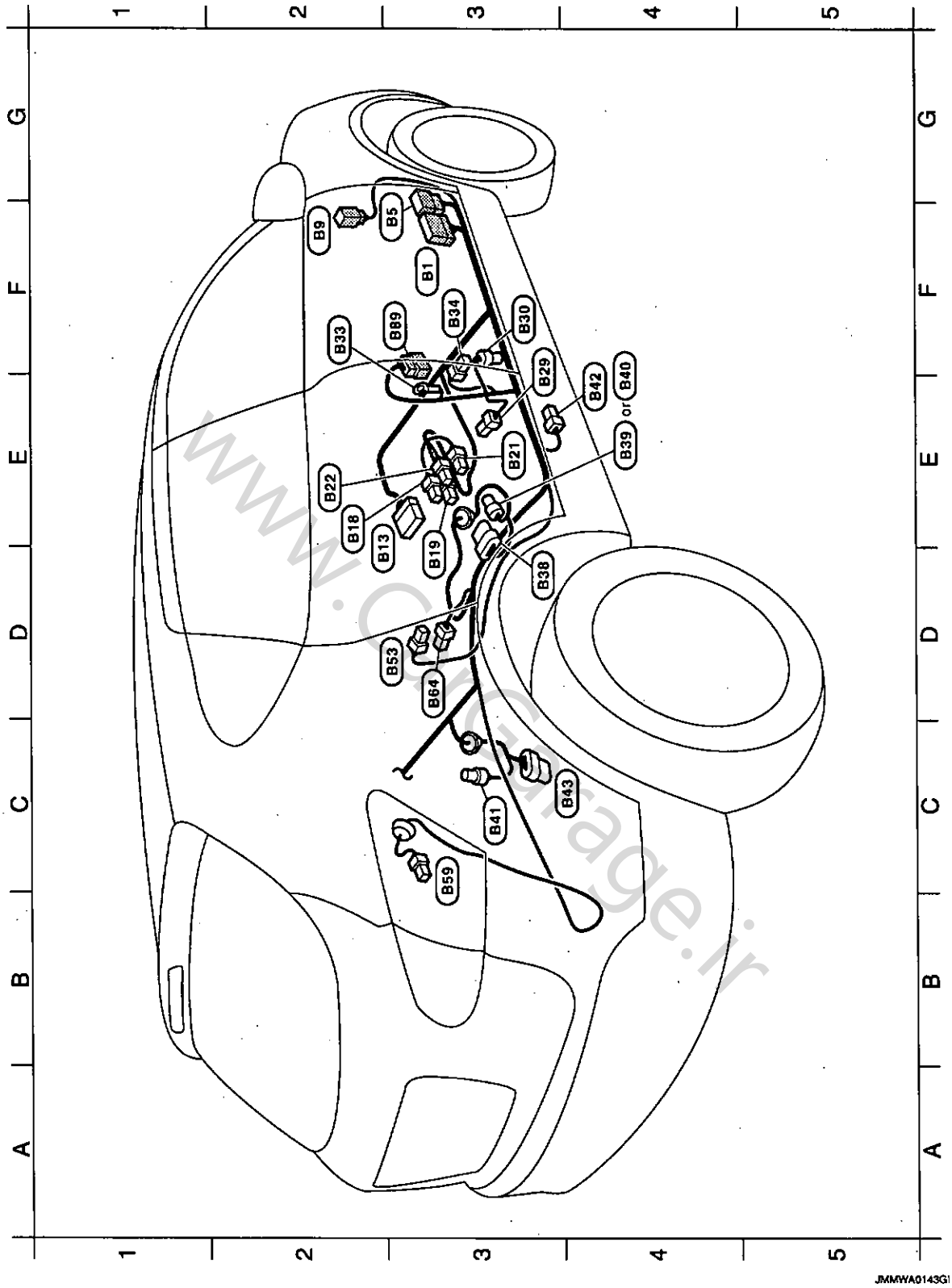

JMMWA0143GI

www.CarGarage.ir

F3	B1	W/24	:	To M11
F3	B5	W/8	:	To M15
F2	B9	W/4	:	To D28
E3	B13	Y/12	:	Air bag diagnosis sensor unit
E2	B18	Y/2	:	Front RH side air bag module
D3	B19	Y/1	:	Front RH side air bag module
E3	B21	W/3	:	Heated seat RH (With heated seat)
E2	B22	W/2	:	Front seat belt buckle switch (Driver side)
F3	B29	Y/2	:	Front RH seat belt pre-tensioner-1
F3	B30	Y/2	:	RH side air bag (Satellite) sensor
F2	B33	–	:	Body ground
F3	B34	W/3	:	Front door switch (Driver side)
D3	B38	GR/5	:	Fuel level sensor unit (With M9R engine 4WD models)
E4	B39	GR/4	:	Fuel level sensor unit (With M9R engine 2WD models)
E4	B40	GR/2	:	Fuel level sensor unit and fuel pump
C3	B41	GR/2	:	Rear wheel sensor RH
E4	B42	OR/2	:	Front RH seat belt pre-tensioner-2
C4	B43	–/8	:	Auto levelizer control unit (With headlamp auto aiming)
D3	B53	W/3	:	Rear door switch RH
C3	B59	–/4	:	Rear combination lamp RH
D3	B64	W/4	:	Rear seat belt buckle switch RH and center
F3	B89	W/8	:	To D91

JMWW0144GI

www.CarGarage.ir

www.CarGarage.ir

RHD : Room Lamp Harness

INFOID:0000000004897473

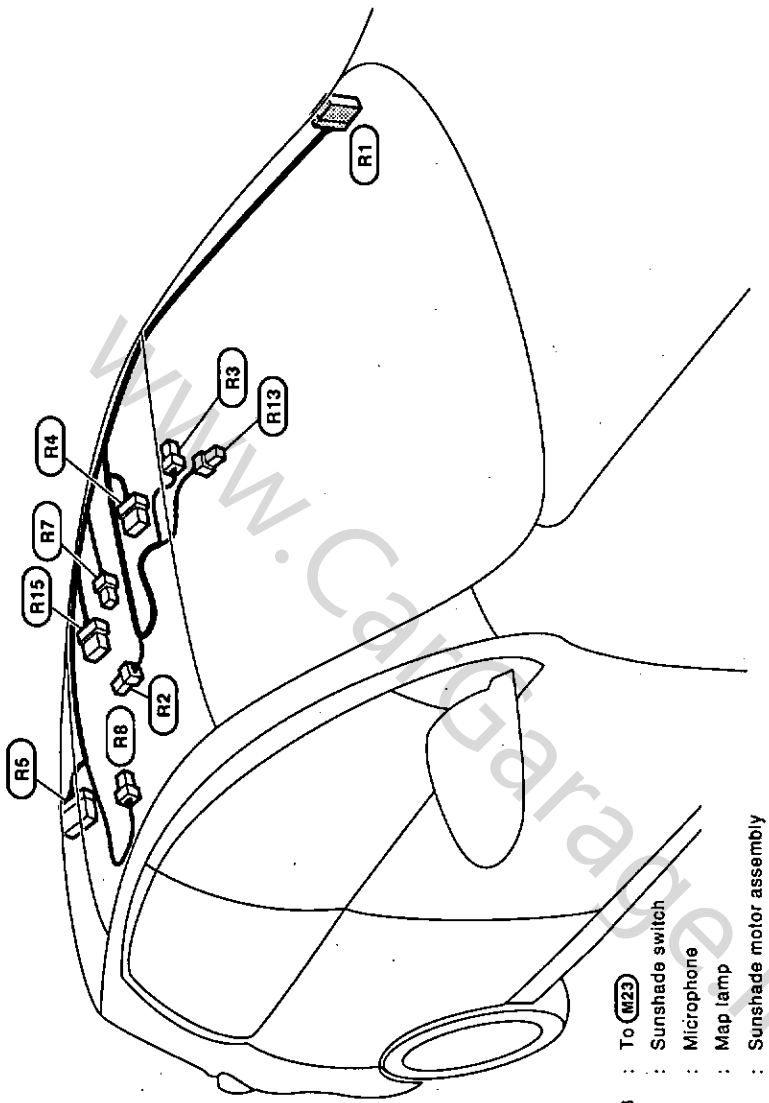

R1	W/18	: To M23
R2	W/3	: Sunshade switch
R3	W/4	: Microphone
R4	–/6	: Map lamp
R5	–/10	: Sunshade motor assembly
R7	W/3	: Personal lamp LH
R8	W/3	: Personal lamp RH
R13	–/3	: Light & Rain sensor
R15	–/6	: Room lamp

JMMWA0146GI

www.CarGarage.ir

www.CarGarage.ir

RHD : Front Door Harness

INFOID:0000000004897474

LH SIDE

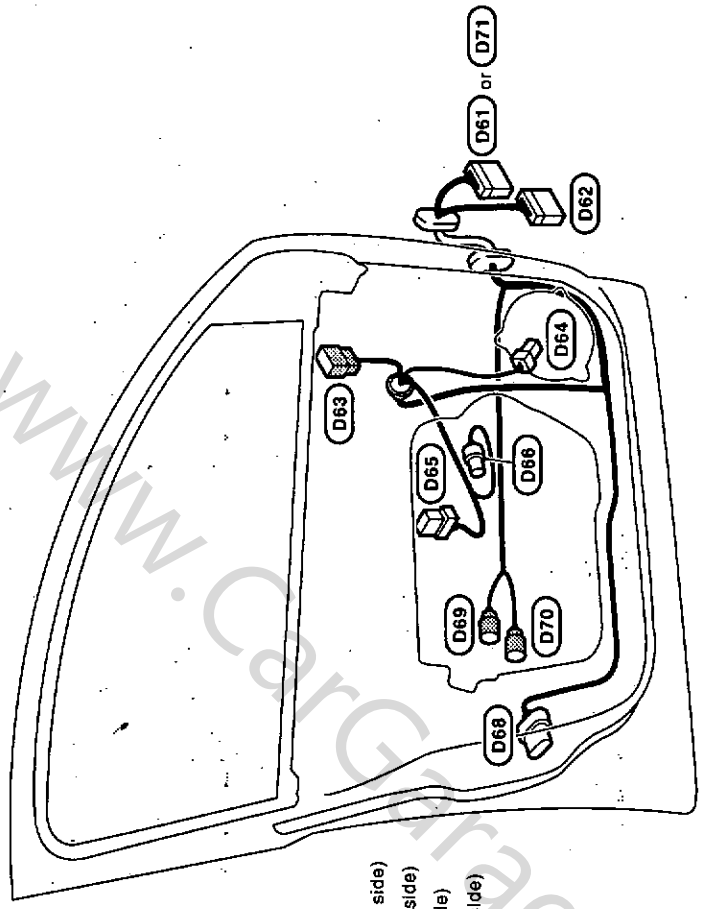

D61	W/16	: To M83 (With Intelligent Key system)
D62	W/10	: To M84
D63	W/8	: Door mirror (Passenger side)
D64	W/2	: Front door speaker LH
D65	W/8	: Front power window switch (Passenger side)
D66	–/2	: Front power window motor (Passenger side)
D68	B/6	: Front door lock actuator (Passenger side)
D69	L/2	: Front door request switch (Passenger side) (With Intelligent Key system)
D70	GR/2	: Outside key antenna (Passenger side) (With Intelligent Key system)
D71	W/12	: To M105 (Without Intelligent Key system)

JMMWA0150GI

www.CarGarage.ir

www.CarGarage.ir

RH SIDE

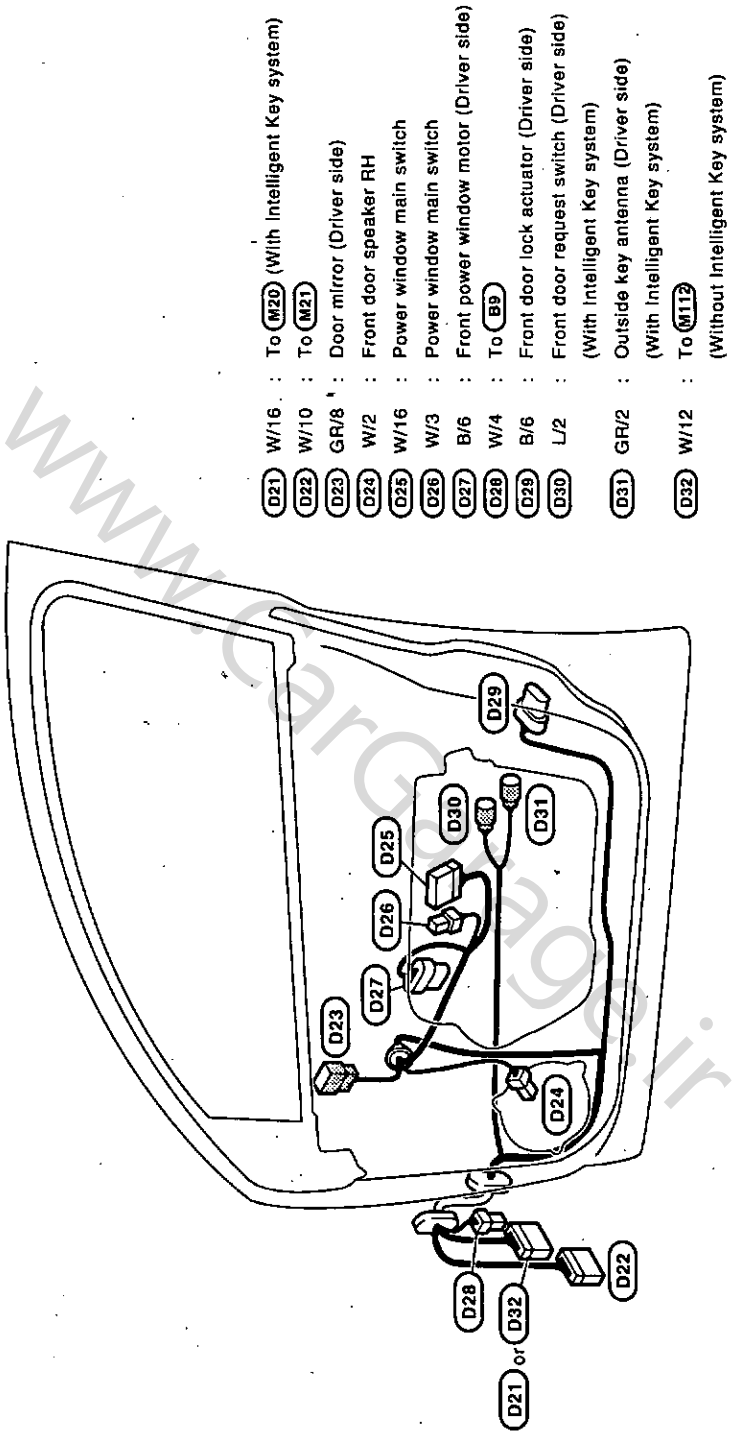

www.CarGarage.ir

RHD : Rear Door Harness

INFOID:0000000004897475

LH SIDE

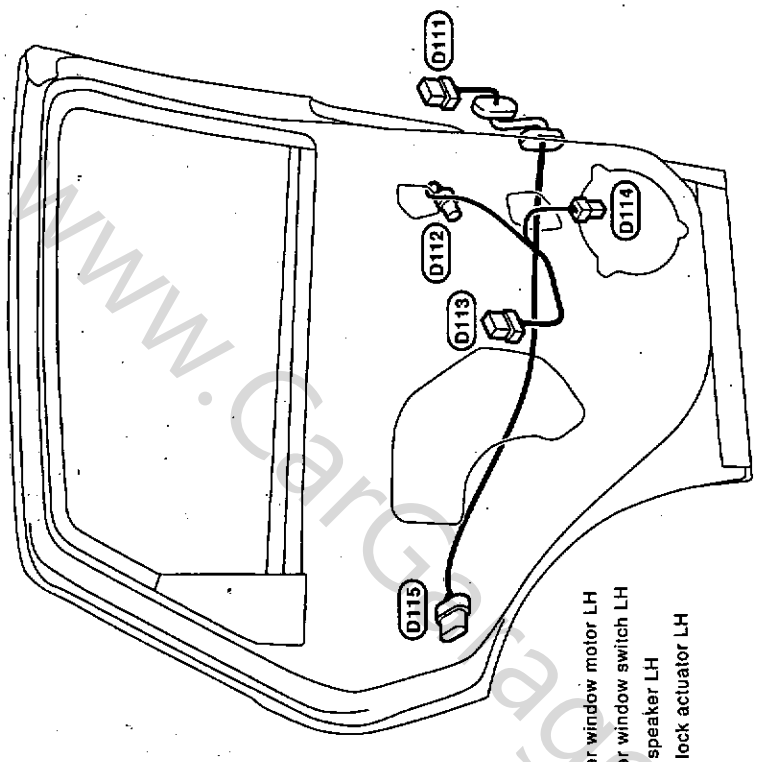

D111	W/8	: To B87
D112	–/2	: Rear power window motor LH
D113	W/8	: Rear power window switch LH
D114	W/2	: Rear door speaker LH
D115	B/6	: Rear door lock actuator LH

JMMWA0035GI

www.CarGarage.ir

HARNESS LAYOUT

www.CarGarage.ir

RH SIDE

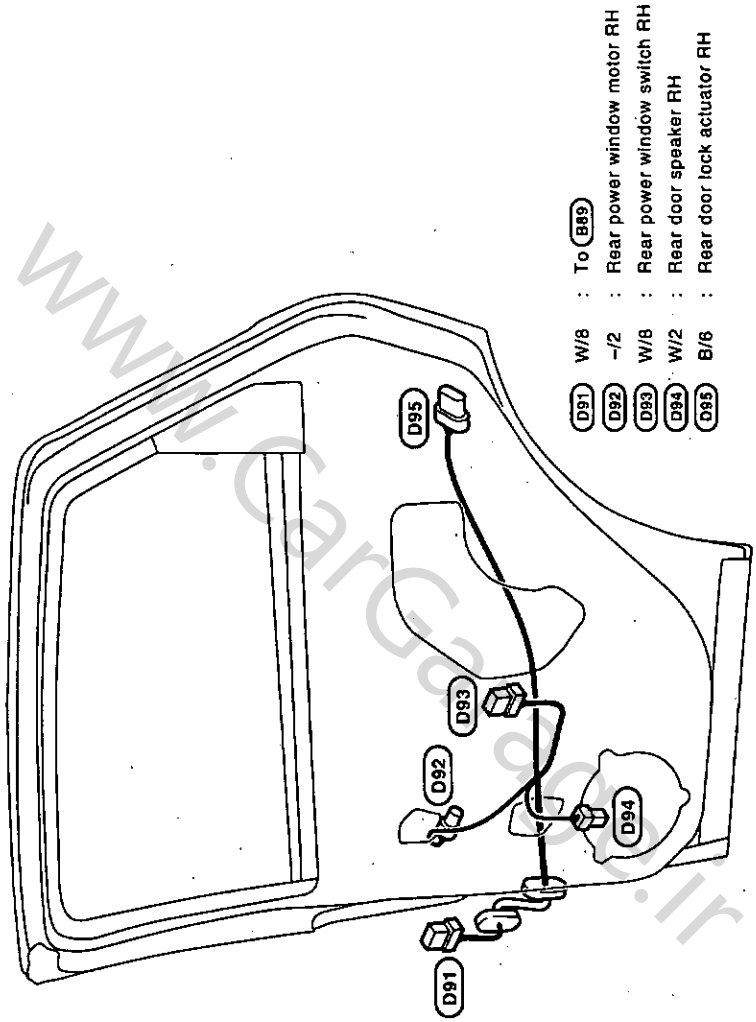

JMMWA0036GI

www.CarGarage.ir

RHD : Back Door Harness

INFOID:0000000004897476

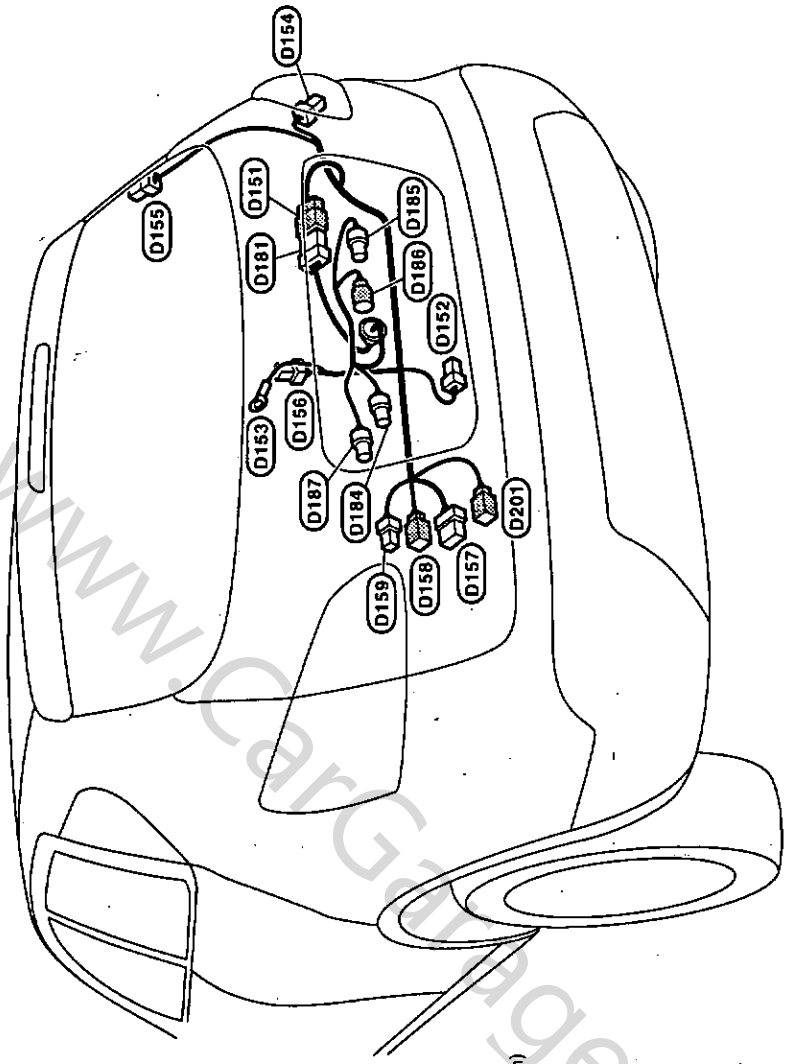

Back door harness

D151	W/8	:	To D181
D152	–/4	:	Back door lock assembly
D153	–	:	Body ground
D154	–/2	:	Back-up lamp RH
D155	B/1	:	Rear window defogger
D156	–/3	:	Rear wiper motor
D157	W/8	:	To B77
D158	W/4	:	To B78
D159	W/2	:	To B79
D201	GR/2	:	To B151

Back door No. 2 harness

D181	W/8	:	To D151
D184	–/2	:	License plate lamp LH
D185	–/2	:	License plate lamp RH
D186	GR/2	:	Back door opener switch
D187	GR/2	:	Back door request switch (With Intelligent Key system)

JMMWA0147GI

www.CarGarage.ir

www.CarGarage.ir

ELECTRICAL UNITS

Terminal Arrangement

INFOID:0000000004897477

ECM

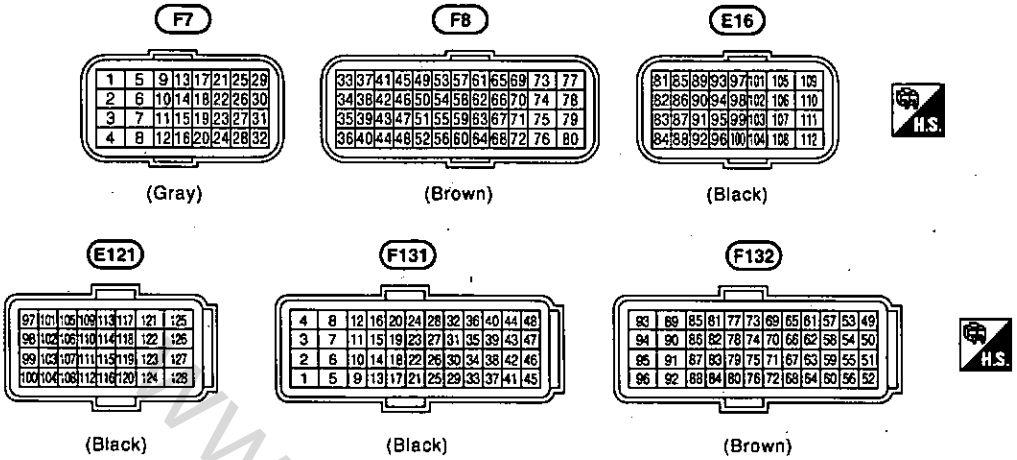

ABS ACTUATOR AND ELECTRIC UNIT (CONTROL UNIT)

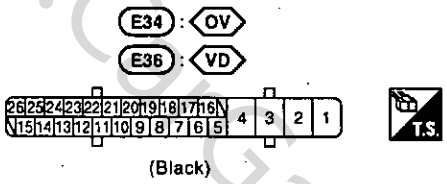

BCM (BODY CONTROL MODULE)

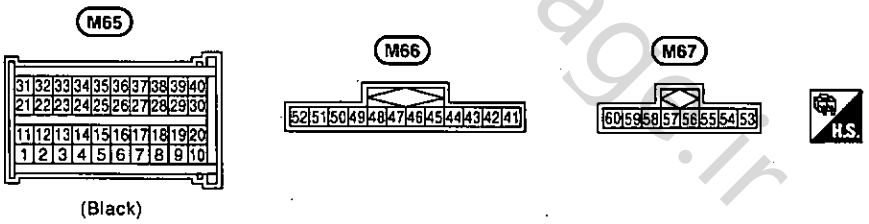

TCM (TRANSMISSION CONTROL MODULE)

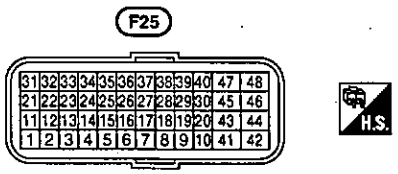

VD : With VDC
OV : Without VDC

JMMWA0125GI

www.CarGarage.ir

www.CarGarage.ir

SMJ (SUPER MULTIPLE JUNCTION)

Terminal Arrangement

INFOID:0000000004897478

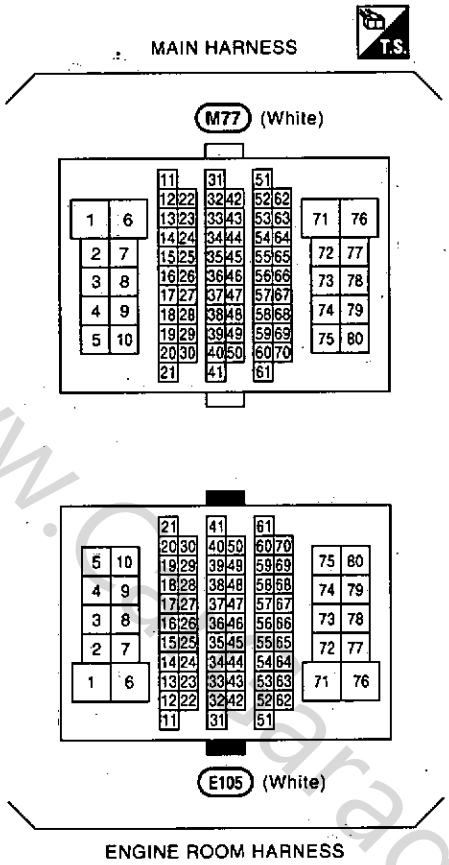

JMMWA0043GI

www.CarGarage.ir

www.CarGarage.ir

HARNESS CONNECTOR

Description

INFOID:0000000004897479

HARNESS CONNECTOR (TAB-LOCKING TYPE)

- The tab-locking type connectors help prevent accidental looseness or disconnection.
- The tab-locking type connectors are disconnected by pushing or lifting the locking tab(s). Refer to the figure below.

CAUTION:
Never pull the harness or wires when disconnecting the connector.

[Example]

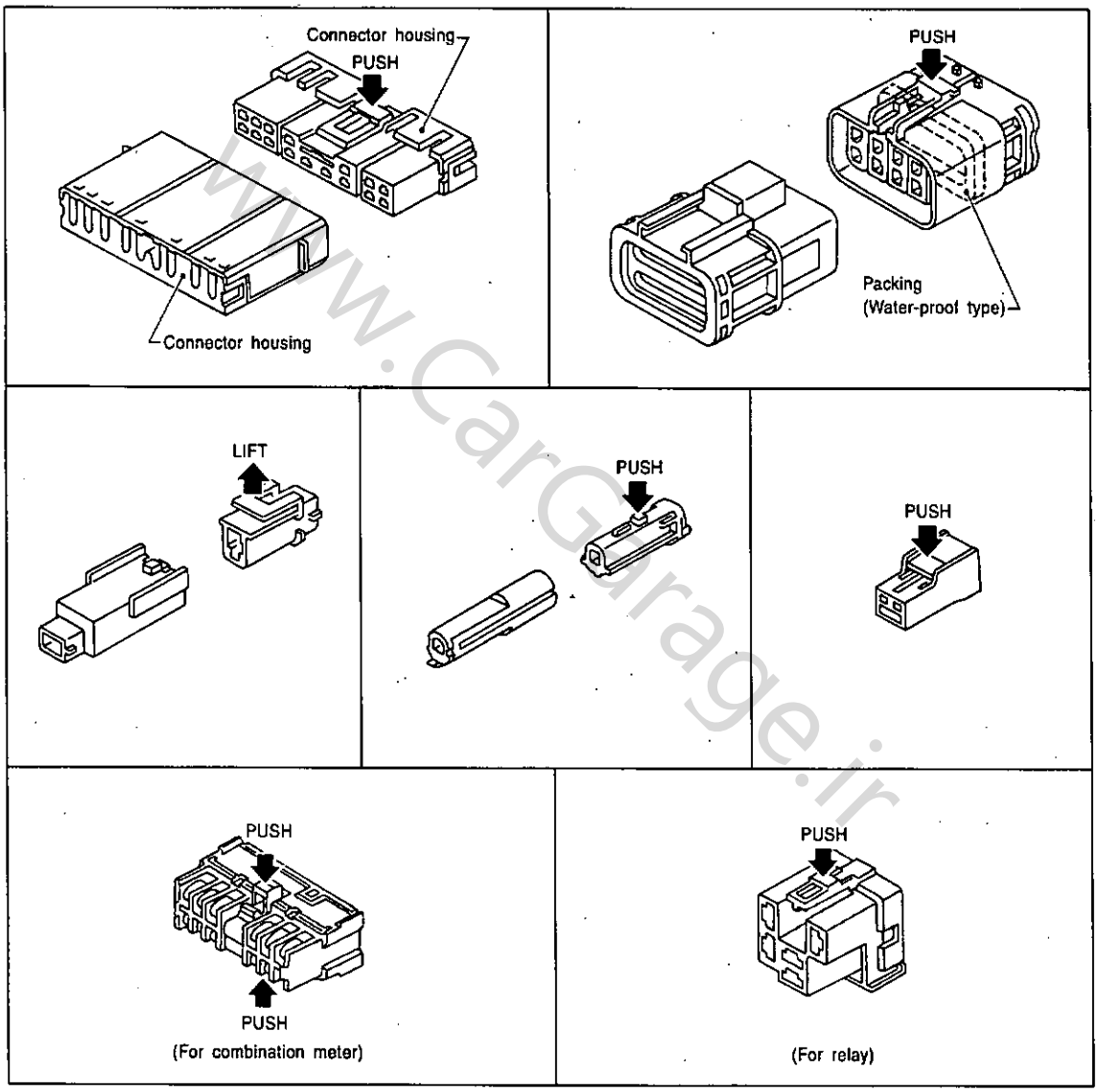

SEL769DA

HARNESS CONNECTOR (SLIDE-LOCKING TYPE)

- A new style slide-locking type connector is used on certain systems and components, especially those related to OBD.
- The slide-locking type connectors help prevent incomplete locking and accidental looseness or disconnection.
- The slide-locking type connectors are disconnected by pushing or pulling the slider. Refer to the figure below.

www.CarGarage.ir

CAUTION:

- **Never pull the harness or wires when disconnecting the connector.**
- **Be careful not to damage the connector support bracket when disconnecting the connector.**

[Example]

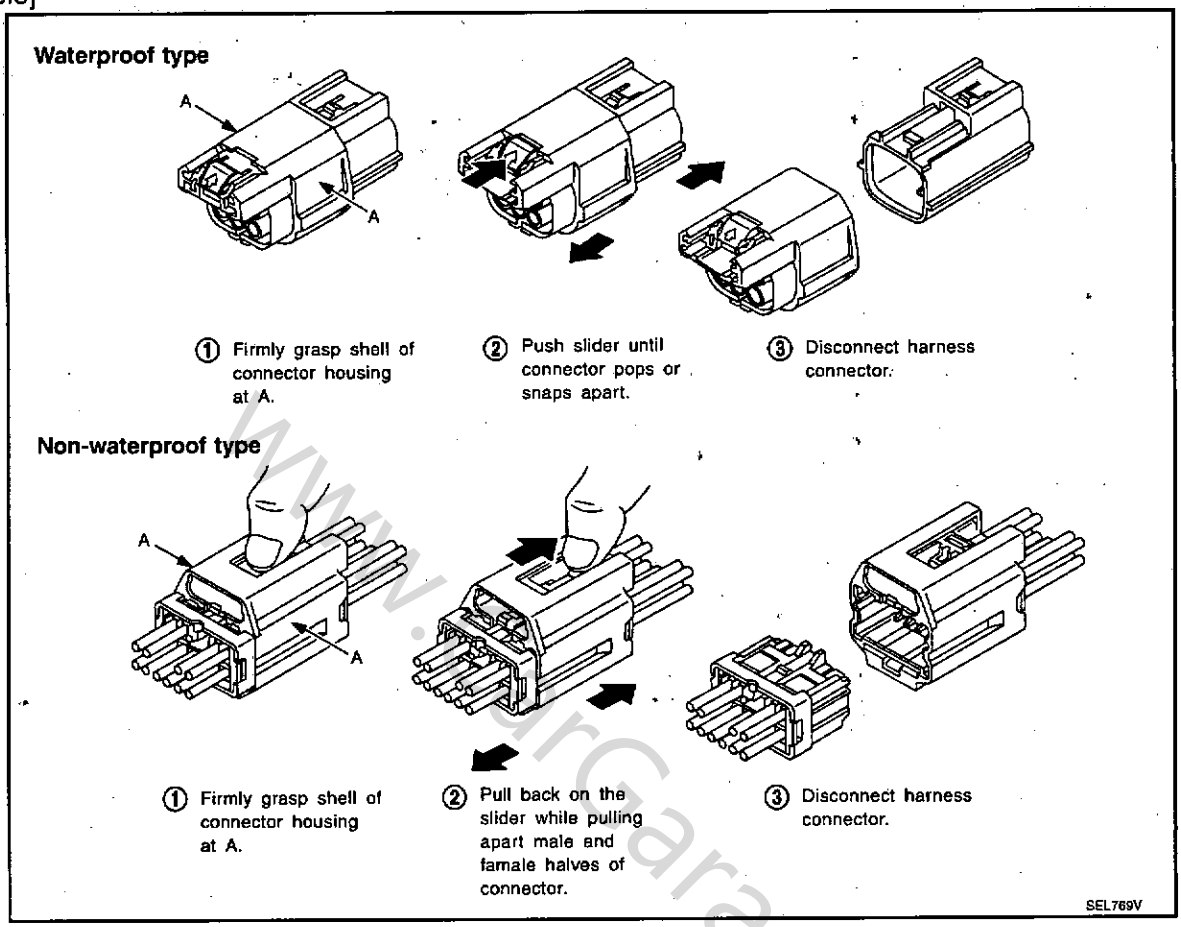

HARNESS CONNECTOR (LEVER LOCKING TYPE)

- Lever locking type harness connectors are used on certain control units and control modules such as ECM, ABS actuator and electric unit (control unit), etc.
- Lever locking type harness connectors are also used on super multiple junction (SMJ) connectors.
- Always confirm the lever is fully locked in place by moving the lever as far as it will go to ensure full connection.

CAUTION:

www.CarGarage.ir

Always confirm the lever is fully released (loosened) before attempting to disconnect or connect these connectors to avoid damage to the connector housing or terminals.

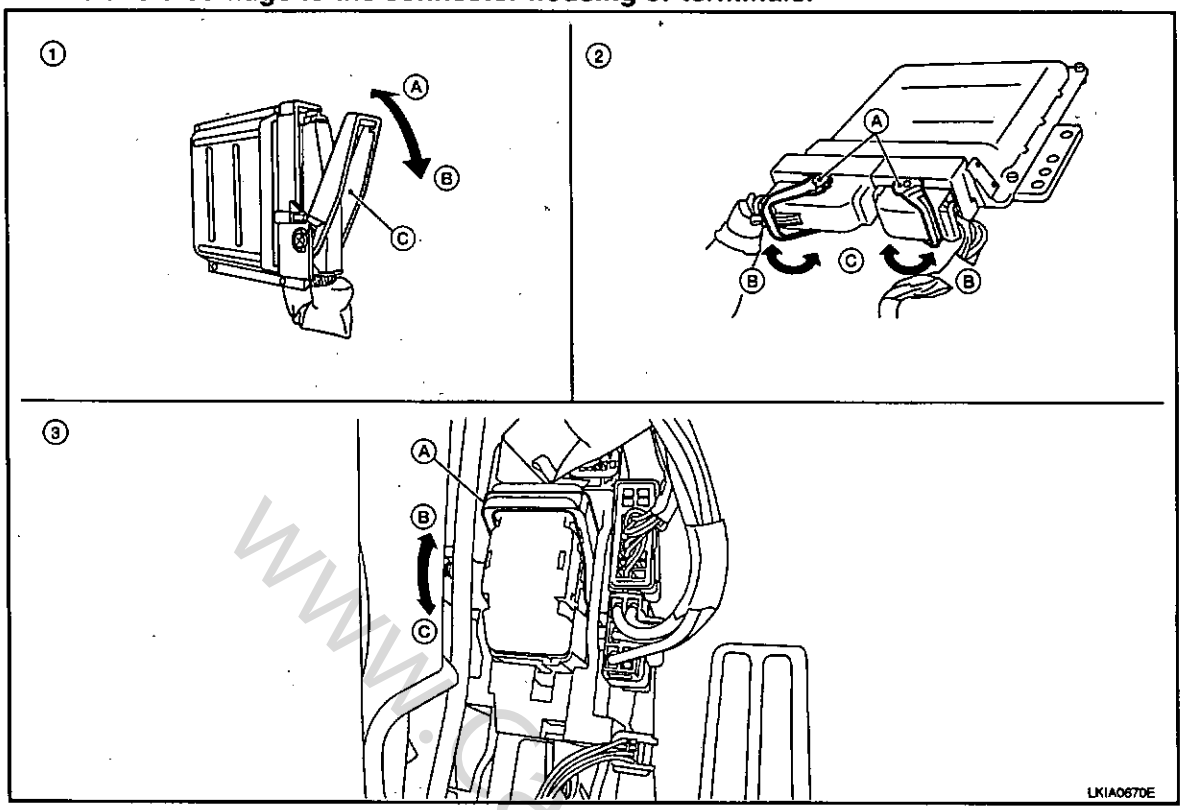

1. Control unit with single lever
   A. Fasten
   B. Loosen
   C. Lever
2. Control unit with dual levers
   A. Levers
   B. Fasten
   C. Loosen
3. SMJ connector
   A. Lever
   B. Fasten
   C. Loosen

www.CarGarage.ir

STANDARDIZED RELAY

Description

INFOID:0000000004897480

NORMAL OPEN, NORMAL CLOSED AND MIXED TYPE RELAYS

Relays can mainly be divided into three types: normal open, normal closed and mixed type relays.

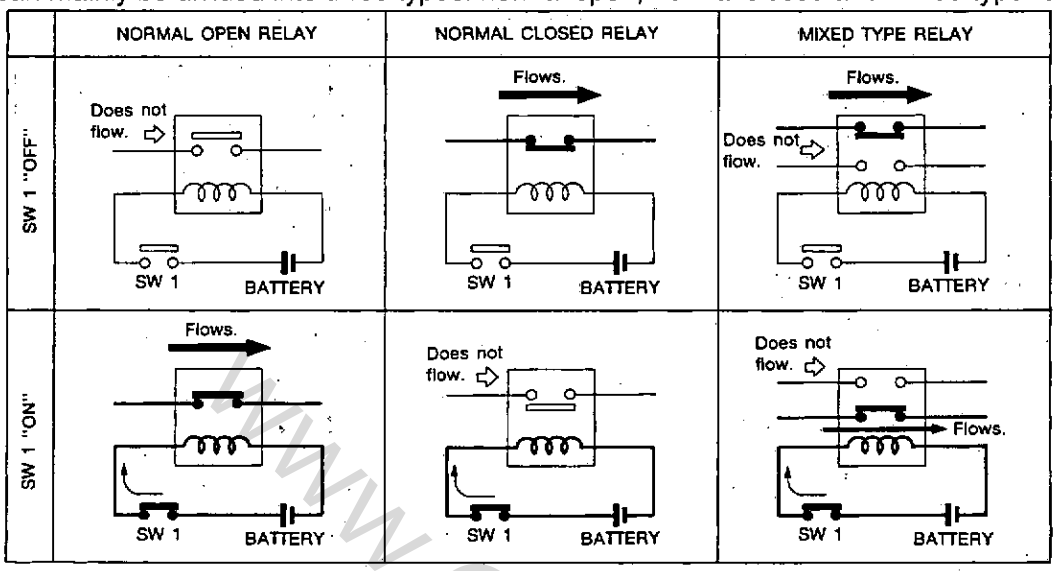

SEL881H

TYPE OF STANDARDIZED RELAYS

1M ..... 1 Make
2M ..... 2 Make
1T ..... 1 Transfer
1M-1B ..... 1 Make 1 Break

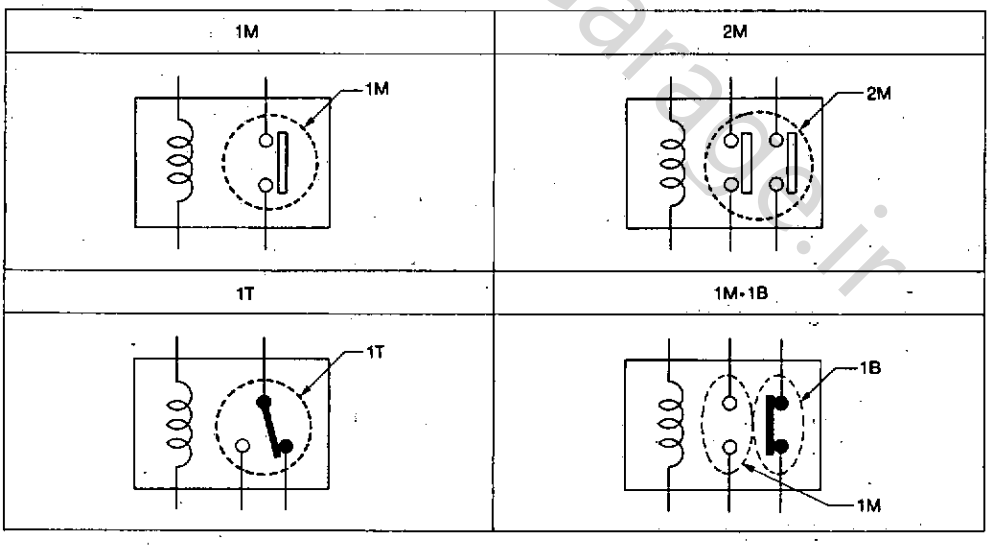

SEL882H

www.CarGarage.ir

Type	Outer view	Circuit	Connector symbol and connection	Case color
1T				BLACK
2M				BROWN
1M•1B				GRAY
1M				BLUE

The arrangement of terminal numbers on the actual relays may differ from those shown above.

SEL188W

www.CarGarage.ir

FUSE BLOCK - JUNCTION BOX (J/B)

Fuse, Connector and Terminal Arrangement

INFOID:0000000004897481

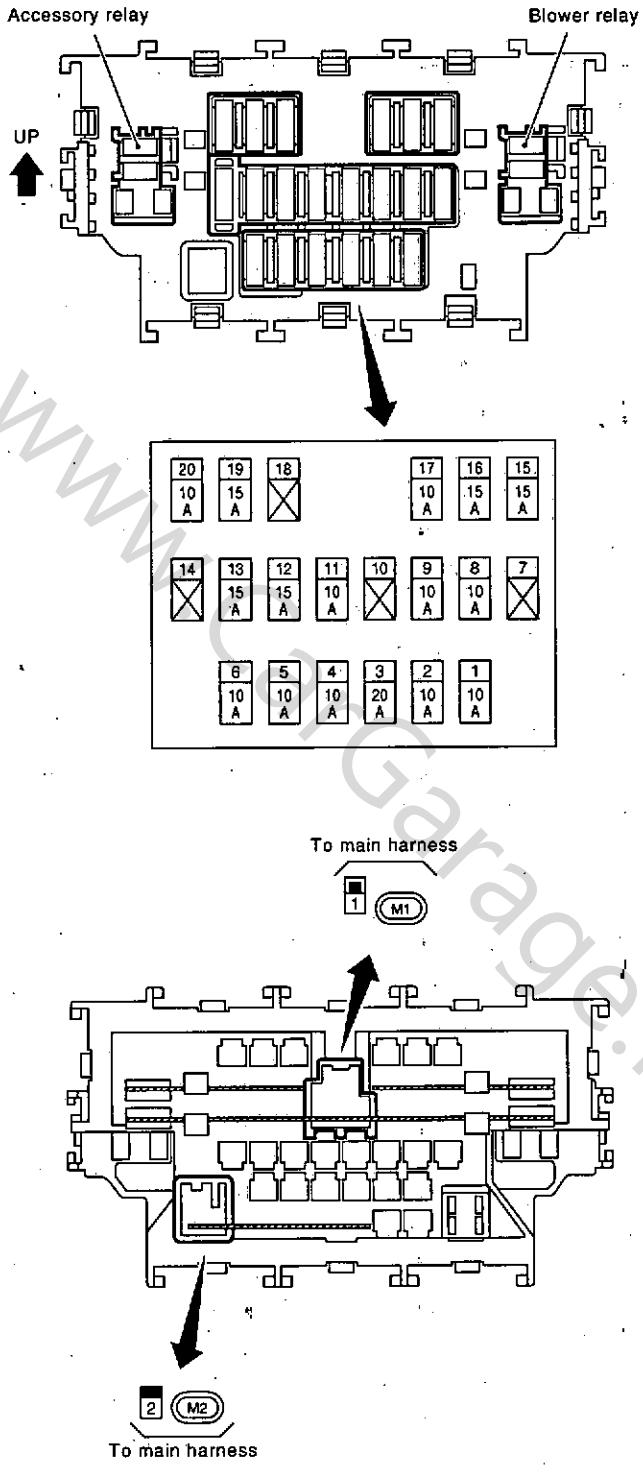

JMMWA0044GI

www.CarGarage.ir

www.CarGarage.ir

FUSE, FUSIBLE LINK AND RELAY BOX

Fuse and Fusible Link Arrangement

INFOID:0000000004897482

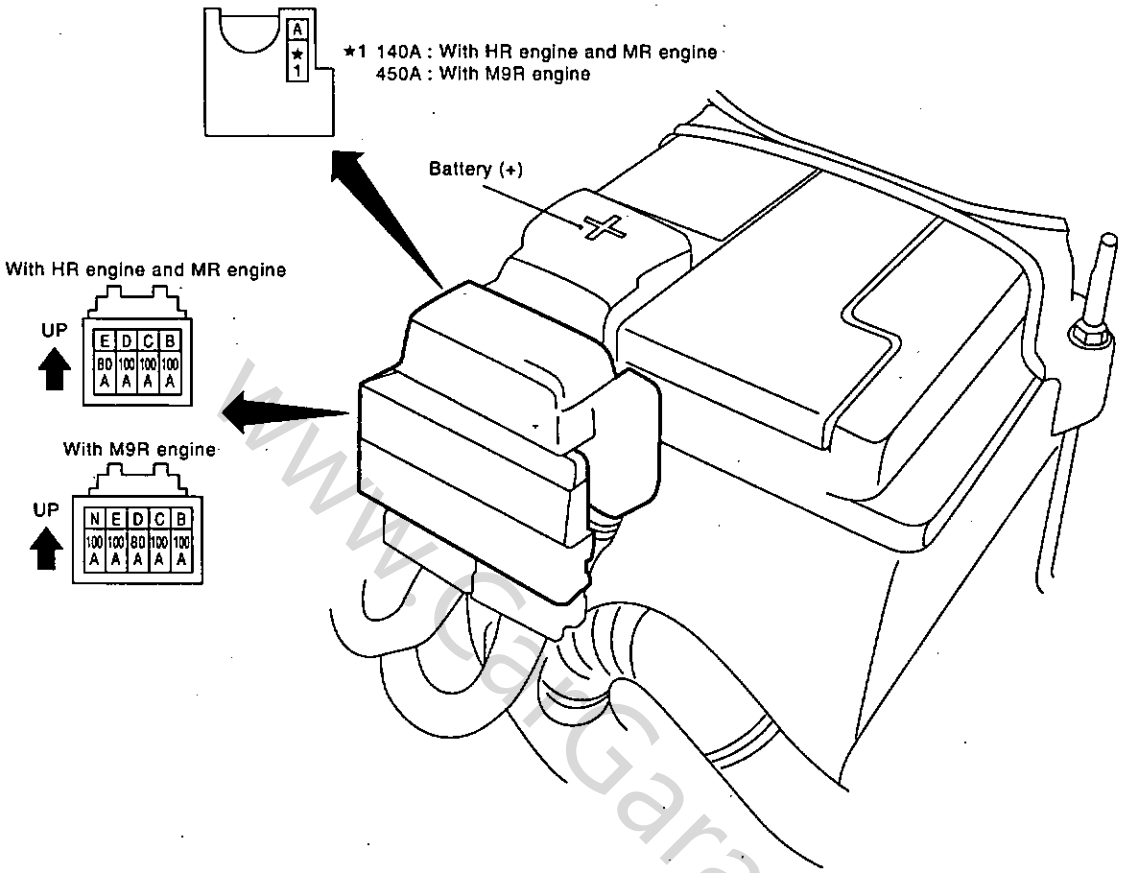

Fusible link holder (E1), (E2), (F2), (F3) (Gasoline engine)
(E63), (E64), (F5) (M9R engine)

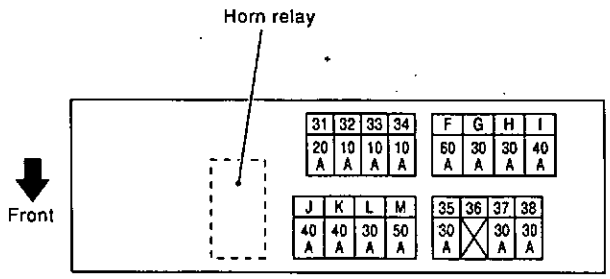

Fuse and fusible link block (E4)

F-M: FUSIBLE LINK
No. 31-38: FUSE

JMMWA0126GI

www.CarGarage.ir

www.CarGarage.ir

IPDM E/R (INTELLIGENT POWER DISTRIBUTION MODULE ENGINE ROOM)

Fuse, Connector and Terminal Arrangement

INFOID:0000000004897483

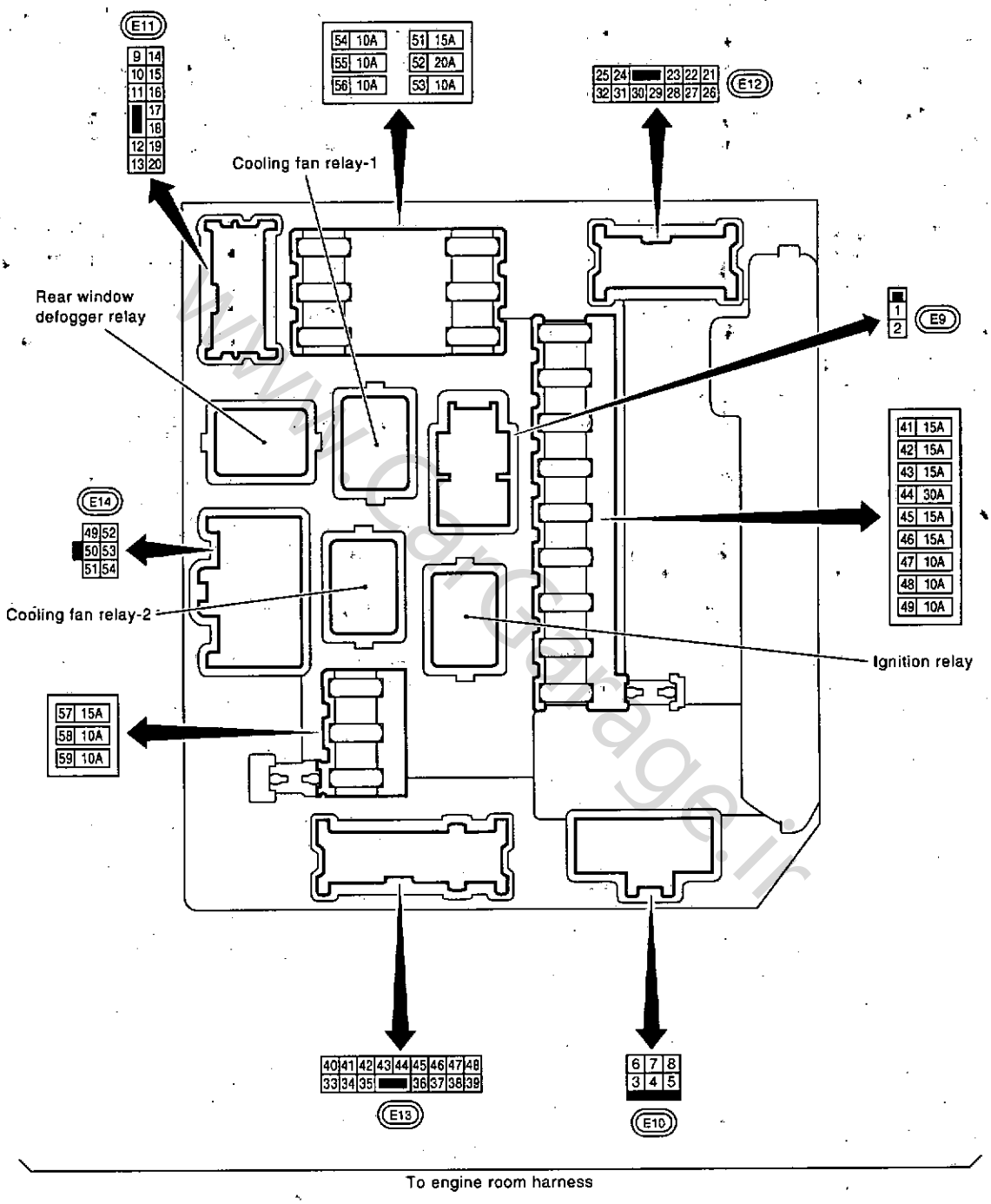

JMMWA0041GI

www.CarGarage.ir

www.CarGarage.ir

PRECAUTION

PRECAUTIONS

Precaution for Supplemental Restraint System (SRS) "AIR BAG" and "SEAT BELT PRE-TENSIONER"

INFOID:0000000004897484

The Supplemental Restraint System such as "AIR BAG" and "SEAT BELT PRE-TENSIONER", used along with a front seat belt, helps to reduce the risk or severity of injury to the driver and front passenger for certain types of collision. This system includes seat belt switch inputs and dual stage front air bag modules. The SRS system uses the seat belt switches to determine the front air bag deployment, and may only deploy one front air bag, depending on the severity of a collision and whether the front occupants are belted or unbelted.
Information necessary to service the system safely is included in the "SRS AIR BAG" and "SEAT BELT" of this Service Manual.

WARNING:

- **To avoid rendering the SRS inoperative, which could increase the risk of personal injury or death in the event of a collision which would result in air bag inflation, all maintenance must be performed by an authorized NISSAN/INFINITI dealer.**
- **Improper maintenance, including incorrect removal and installation of the SRS, can lead to personal injury caused by unintentional activation of the system. For removal of Spiral Cable and Air Bag Module, see the "SRS AIR BAG".**
- **Do not use electrical test equipment on any circuit related to the SRS unless instructed to in this Service Manual. SRS wiring harnesses can be identified by yellow and/or orange harnesses or harness connectors.**

PRECAUTIONS WHEN USING POWER TOOLS (AIR OR ELECTRIC) AND HAMMERS

WARNING:

- **When working near the Air Bag Diagnosis Sensor Unit or other Air Bag System sensors with the ignition ON or engine running, DO NOT use air or electric power tools or strike near the sensor(s) with a hammer. Heavy vibration could activate the sensor(s) and deploy the air bag(s), possibly causing serious injury.**
- **When using air or electric power tools or hammers, always switch the ignition OFF, disconnect the battery, and wait at least 3 minutes before performing any service.**

www.CarGarage.ir

www.CarGarage.ir

ON-VEHICLE REPAIR

BATTERY

Exploded View

INFOID:0000000004897485

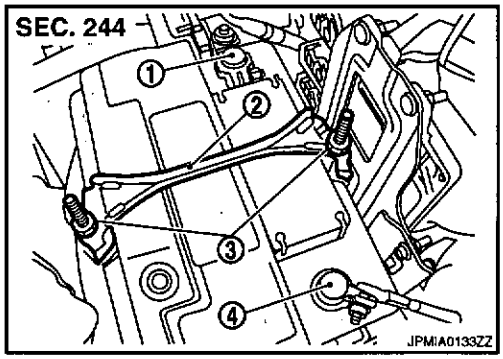

1 : Battery terminal (+)
2 : Battery fix frame
3 : Battery fix frame mounting nuts
4 : Battery terminal (-)

Removal and Installation

INFOID:0000000004897486

REMOVAL

1. Loosen battery terminal nuts (1), and disconnect both battery cables from battery terminals.
   CAUTION:
   When disconnecting, disconnect the battery cable from the negative terminal first.
2. Remove battery fix frame mounting nuts (3) to remove battery fix frame (2).
3. Remove battery.

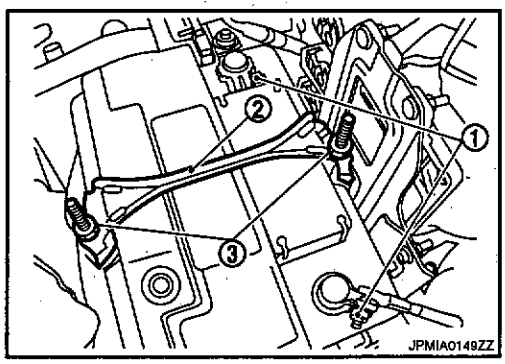

INSTALLATION

Install in the reverse order of removal.
CAUTION:
When connecting, connect the battery cable to the positive terminal first.

Battery fix frame mounting nut

: 5.4 N·m (0.55 kg-m, 48 in-lb)

Battery terminal nut

: 5.4 N·m (0.55 kg-m, 48 in-lb)

www.CarGarage.ir

www.CarGarage.ir

BATTERY TERMINAL WITH FUSIBLE LINK

Exploded View

INFOID:0000000004897487

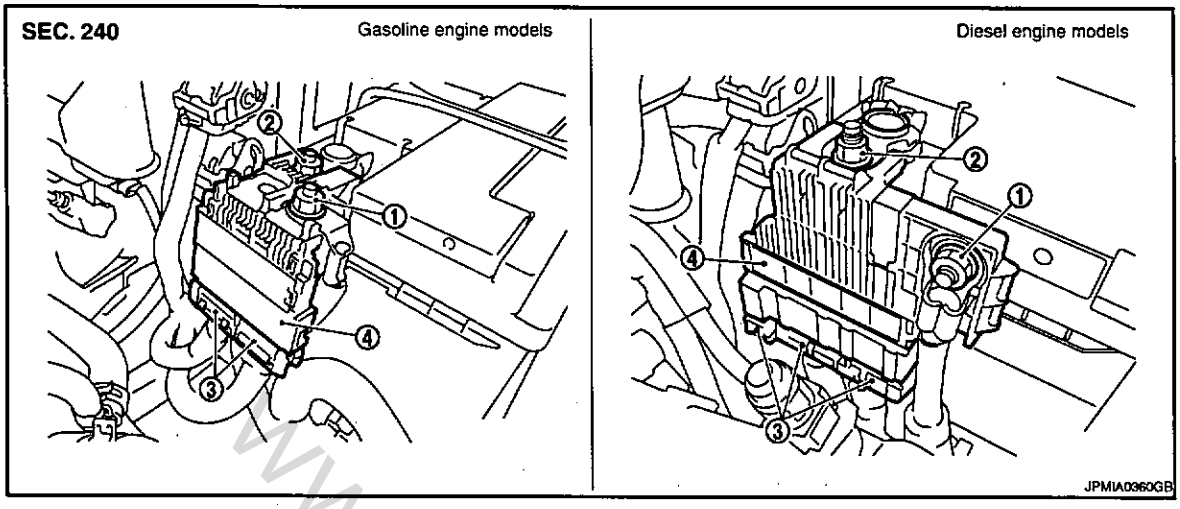

1. Harness mounting nut
2. Fusible link holder mounting nut
3. Harness connector
4. Battery terminal with fusible link

Removal and Installation

INFOID:0000000004897488

REMOVAL

1. Disconnect the battery cable from the negative terminal.
2. Remove cover of battery positive terminal.
3. Remove harness mounting nut (1) to disconnect harness connector (3).
4. Remove fusible link holder mounting nut (2) to remove battery terminal with fusible link (4).

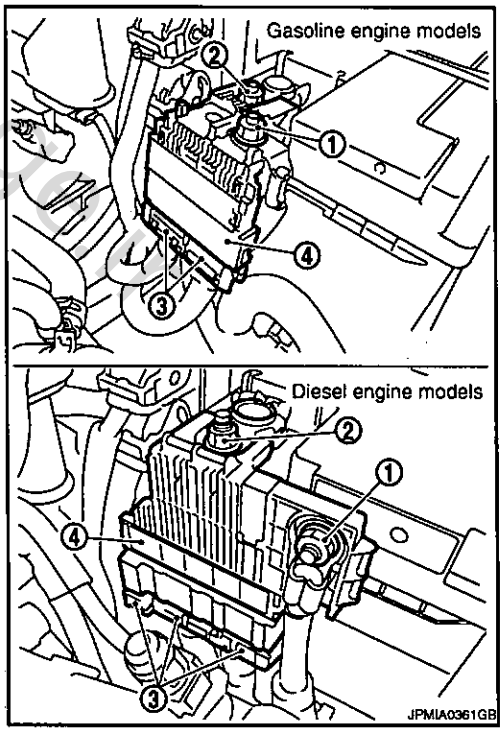

INSTALLATION

Install in the reverse order of removal.

www.CarGarage.ir

www.CarGarage.ir

Harness mounting nut

: 10.3 N·m (1.1 kg-m, 8 ft-lb)

Fusible link holder mounting nut

: 10.3 N·m (1.1 kg-m, 8 ft-lb)

www.CarGarage.ir

www.CarGarage.ir

www.CarGarage.ir

SERVICE DATA AND SPECIFICATIONS (SDS)

SERVICE DATA AND SPECIFICATIONS (SDS)

Battery

INFOID:0000000004897489

Specification		Gasoline engine models	Diesel engine models
Type		L2	L3
20 hour rate capacity	[V - Ah]	12 - 60	12 - 70
Cold cranking current (For reference value)	[A]	600	720

www.CarGarage.ir